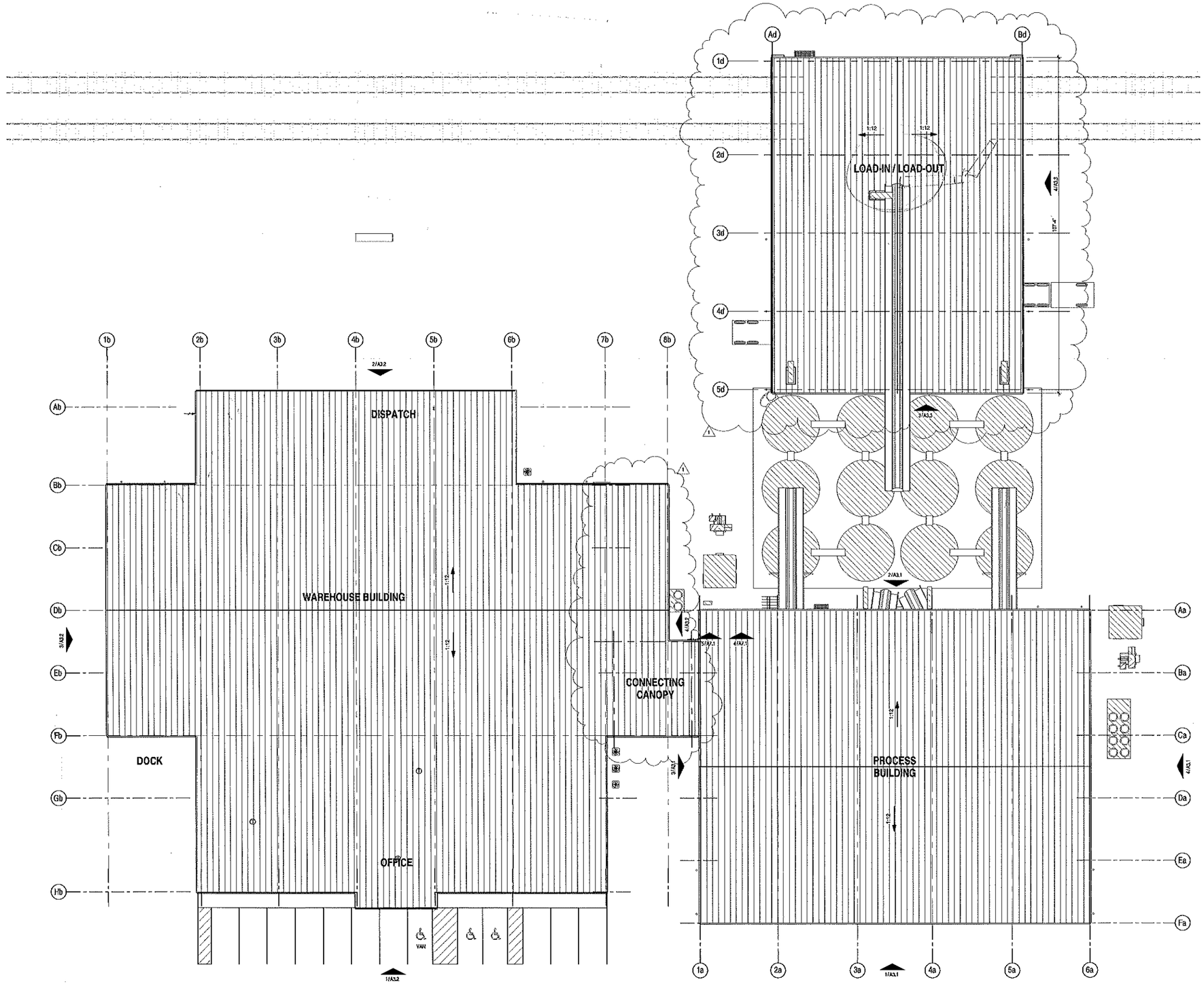

1 OVERALL BUILDING LAYOUT
SCALE: 1/16" = 1'-0"

THESE DRAWINGS AND SPECIFICATIONS ARE THE PROPERTY OF JOHNSON & PACE, INC. THE INFORMATION SHOWN HEREON WAS PREPARED BY OR UNDER THE DIRECT SUPERVISION OF THE UNDERSIGNED ARCHITECT OR ENGINEER. THEY ARE INTENDED FOR USE ON THE PROJECT NAMED HEREON. THEY ARE NOT INTENDED FOR USE ON OTHER PROJECTS OR EXTENSIONS OF THIS PROJECT. REPRODUCTIONS OF THESE DRAWINGS AND SPECIFICATIONS WITHOUT WRITTEN PERMISSION OF JOHNSON & PACE, INC. IS PROHIBITED.

Copyright © 2010, Johnson & Pace Incorporated

Filename: C:\Users\jcrutchfield\Documents\2009-11-006-02 Arch_JPW.rvt
Plotted: 2/4/2011 11:31:24 AM

JOHNSON & PACE INCORPORATED
ENGINEERING • ARCHITECTURE • SURVEYING
1201 W. LOOP 281, SUITE 300,
LONGVIEW, TEXAS 75604
(903) 753-3480 FAX (903) 753-3483
WEBSITE: www.johnsonpace.com

SOUTHERN PRECISION SANDS
NEW COATING FACILITY
VOCA, TEXAS

REVISIONS

NO.	DESCRIPTION	BY	DATE
1	Revision 1 Building Modifications		2/4/2011

OVERALL BUILDING LAYOUT

ISSUED FOR BID

JOB NO: 2009-11-006-02		ISSUE DATE:	
DRAWN BY: JCT	CHECKED BY:	APPROVED BY:	SCALE: 1/16" = 1'-0"
SHEET NO.: A1.1			REVISION NO: 1

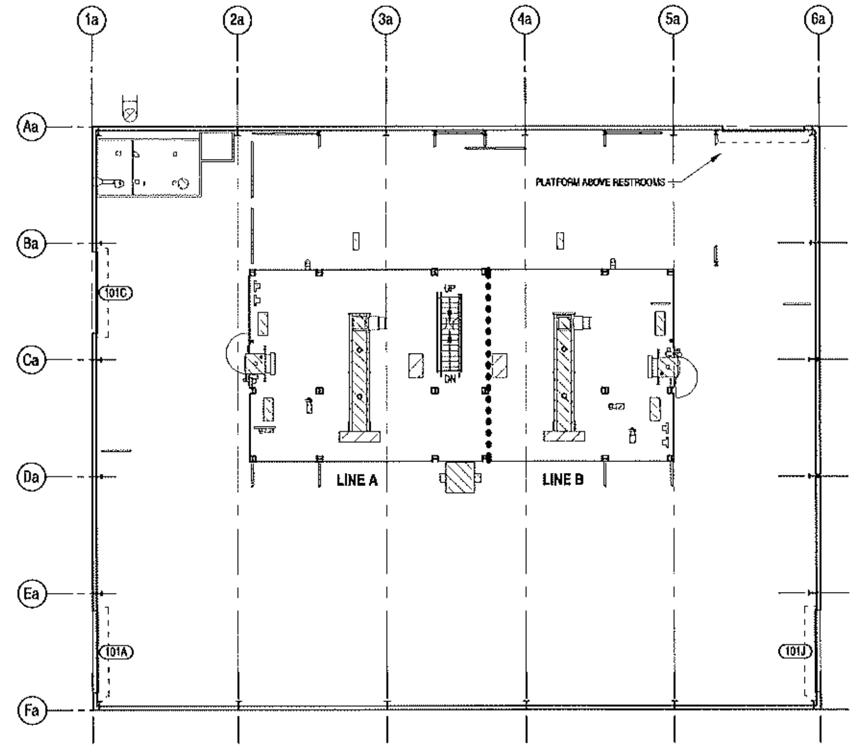

1 TOWER LEVEL 1 (12'-8" AFF)
SCALE: 1/16" = 1'-0"

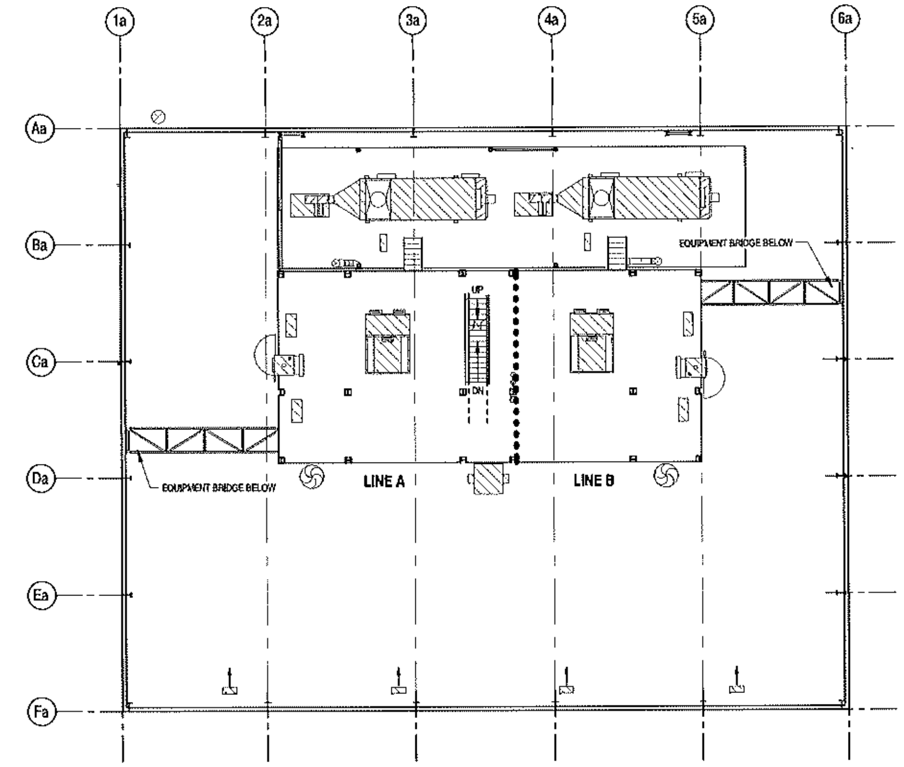

2 TOWER LEVEL 2 (22'-0" AFF)
SCALE: 1/16" = 1'-0"

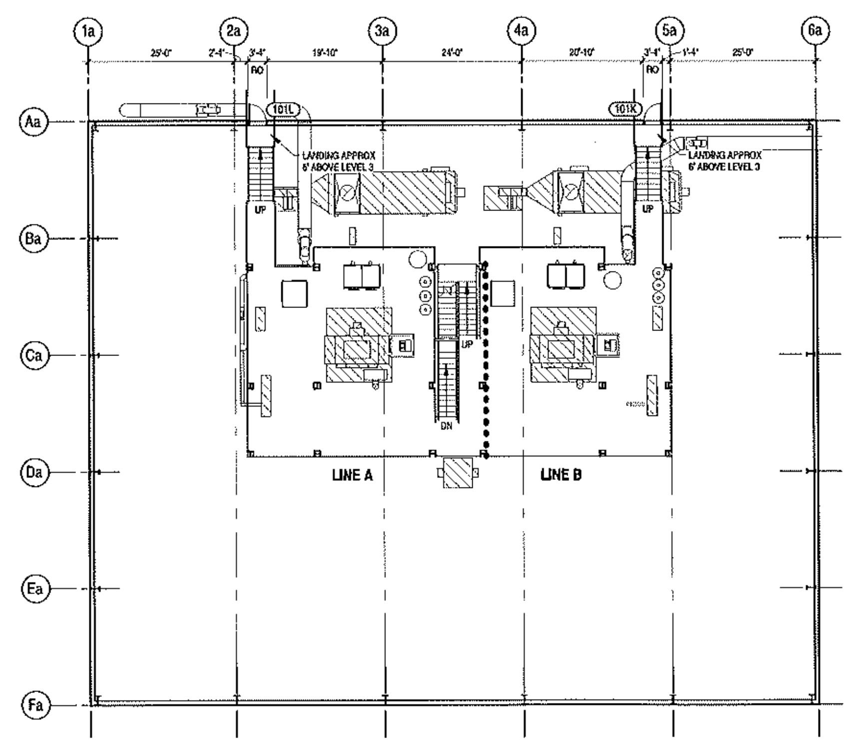

3 TOWER LEVEL 3 (34'-6" AFF)
SCALE: 1/16" = 1'-0"

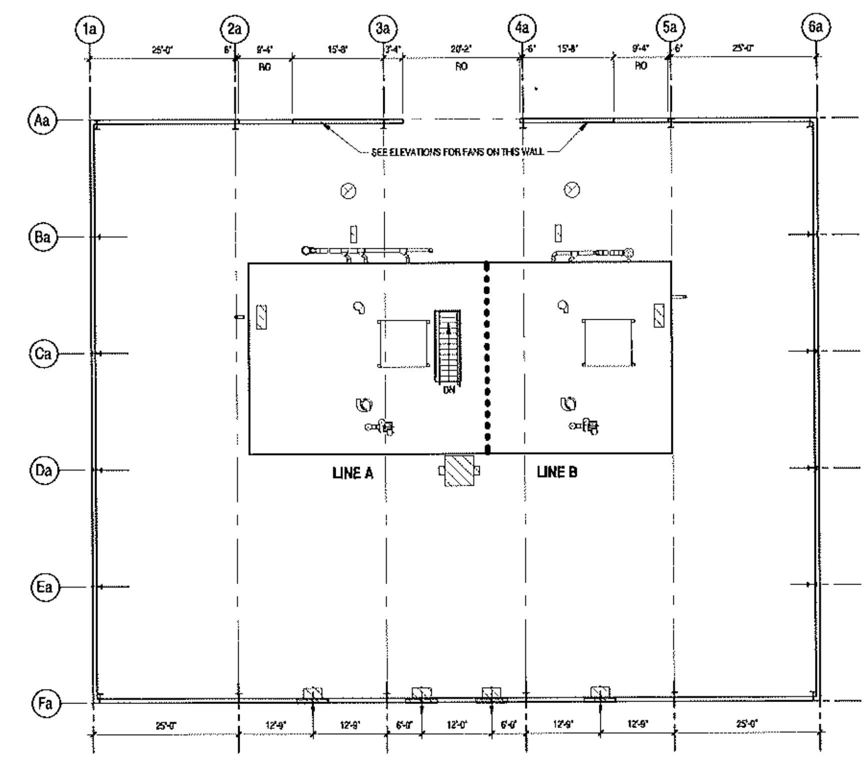

4 TOWER LEVEL 4 (52'-6" AFF)
SCALE: 1/16" = 1'-0"

Copyright © 2010, Johnson & Pace Incorporated

THIS DRAWING AND RELATED SPECIFICATIONS, INCLUDING ALL DOCUMENTS ON ELECTRONIC MEDIA, WERE PREPARED BY JOHNSON AND PACE INCORPORATED (JPI) AS INSTRUMENTS OF SERVICE AND SHALL REMAIN THE PROPERTY OF JPI. THE INFORMATION SHOWN HEREON SHALL BE USED ONLY BY THE CLIENT TO WHICH SERVICES ARE RENDERED AND ONLY FOR THE PURPOSE OF DESCRIBING, CONSTRUCTING, OR INSTALLING THE WORK SHOWN HEREON AT THE DESIGNATED LOCATION OF THE SPECIFIED SITE. ANY UNAUTHORIZED USE OF THESE DOCUMENTS, INCLUDING WITHOUT LIMITATION REPRODUCTION OR ALTERATION, IS STRICTLY PROHIBITED AND SHALL CAUSE THE WAIVER OF ANY EXPRESSED WARRANTIES AND ALSO SEVER ANY LIABILITIES WHICH MAY ARISE FROM THE CONSTRUCTION, USE OR RESULT OF SUCH UNAUTHORIZED USE OR CHANGES.

JOHNSON & PACE INCORPORATED
ENGINEERING • ARCHITECTURE • SURVEYING
1201 NW LOOP 281, SUITE 100,
LONGVIEW, TEXAS 75604
(903) 753-0663 FAX (903) 753-8803
website: www.johnsonpace.com

SOUTHERN PRECISION SANDS NEW COATING FACILITY VOCA, TEXAS

REVISIONS		
NO.	DESCRIPTION	BY	DATE

PROCESS BUILDING TOWER PLANS

ISSUED FOR BID

JOB NO.: 2569-11-006-02		ISSUE DATE:
DRAWN BY: KRA	CHECKED BY:	APPROVED BY:	SCALE: 1/16" = 1'-0"
SHEET NO.: A2.2		REVISION NO.:

Filename: C:\Users\jbohr\Documents\2569-11-006-02 Arch_3Brim.rvt Plotted: 5/4/2011 11:51:07 AM

Copyright © 2010, Johnson & Pace Incorporated

THIS DRAWING AND RELATED SPECIFICATIONS, INCLUDING ALL DOCUMENTS ON ELECTRONIC MEDIA, WERE PREPARED BY JOHNSON AND PACE INCORPORATED (JPI) AS INSTRUMENTS OF SERVICE AND SHALL REMAIN THE PROPERTY OF JPI. THE INFORMATION SHOWN HEREON SHALL BE USED ONLY BY THE CLIENT TO WHOM SERVICES ARE RENDERED AND ONLY FOR THE PURPOSE OF DESIGNING, CONSTRUCTING, OR INSTALLING THE WORK SHOWN HEREON AT THE DESIGNATED LOCATION ON THE SPECIFIED SITE. ANY UNAUTHORIZED USE OF THESE DOCUMENTS, INCLUDING WITHOUT LIMITATION REPRODUCTION OR ALTERATION, IS STRICTLY PROHIBITED AND SHALL CAUSE THE WAIVER OF ANY EXPRESSED WARRANTIES AND ALSO SEVER ANY LIABILITIES WHICH MAY ARISE FROM THE CONSTRUCTION, USE OR RESULT OF SUCH UNAUTHORIZED USE OR CHANGES.

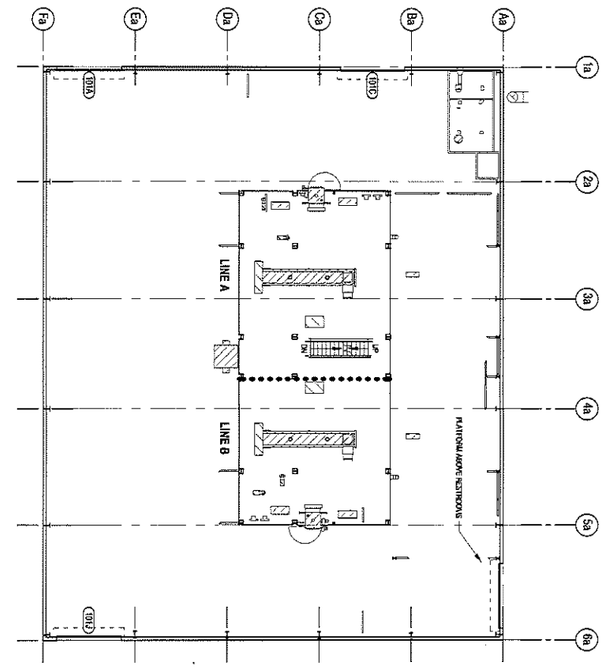

1 TOWER LEVEL 1 (12'-8" AFF)
SCALE: 1/8" = 1'-0"

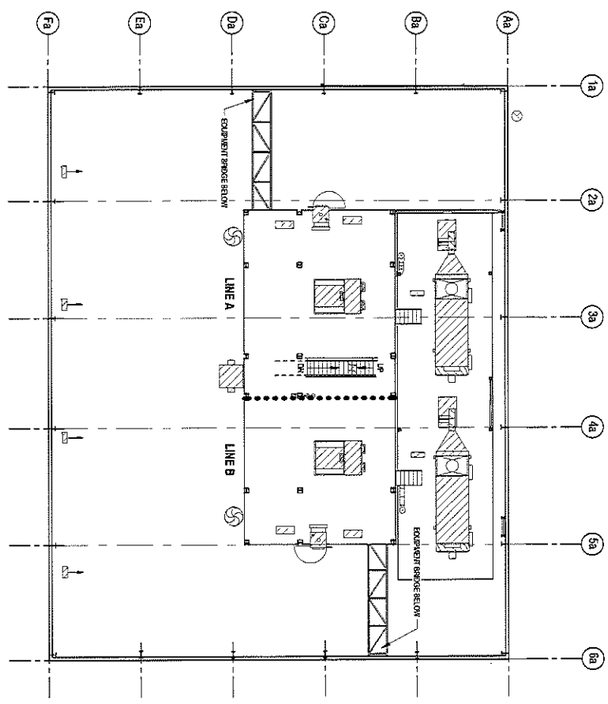

2 TOWER LEVEL 2 (22'-0" AFF)
SCALE: 1/8" = 1'-0"

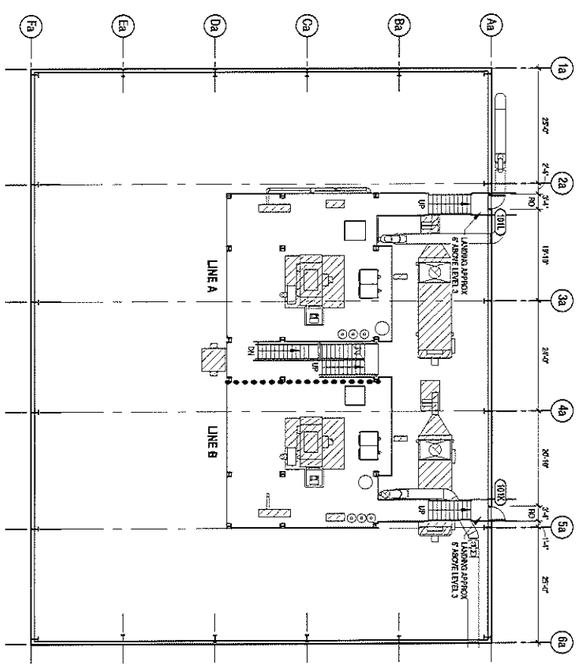

3 TOWER LEVEL 3 (34'-6" AFF)
SCALE: 1/8" = 1'-0"

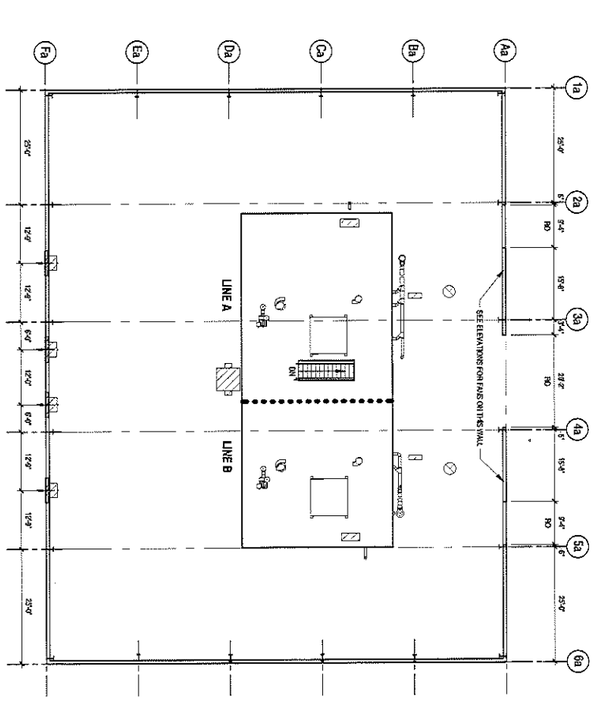

4 TOWER LEVEL 4 (62'-6" AFF)
SCALE: 1/8" = 1'-0"

JOB NO: 2569-11-006-02			ISSUE DATE:
DRAWN BY: KRA	CHECKED BY:	APPROVED BY:	SCALE: 1/16" = 1'-0"
SHEET NO.: A2.2			REVISION NO:

PROCESS BUILDING TOWER PLANS

ISSUED FOR BID

REVISIONS

NO	DESCRIPTION	BY	DATE

SOUTHERN PRECISION SANDS NEW COATING FACILITY VOCA, TEXAS

JOHNSON & PACE INCORPORATED
ENGINEERING • ARCHITECTURE • SURVEYING
1201 NW LOOP 281, SUITE 100,
LONGVIEW, TEXAS 75604
(903)753-0903 FAX (903)753-0903
website: www.johnsonpace.com

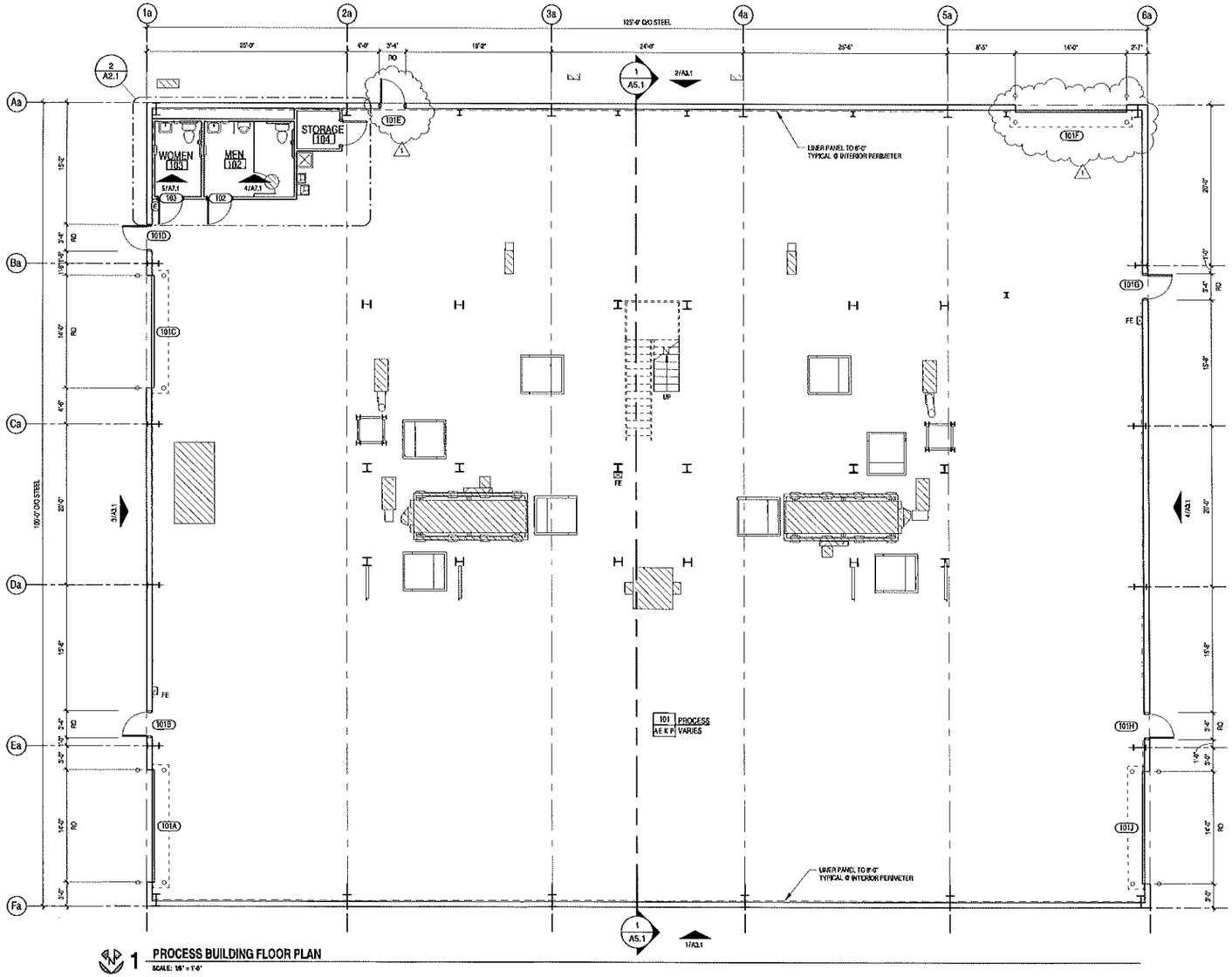

1 PROCESS BUILDING FLOOR PLAN
SCALE: 1/8" = 1'-0"

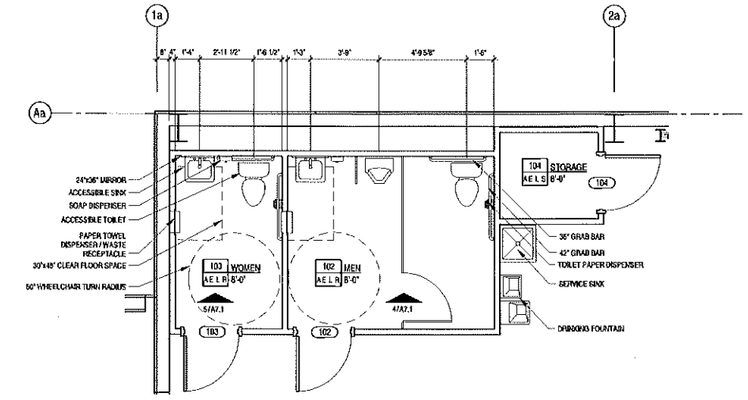

2 ENLARGED FLOOR PLAN
SCALE: 1/4" = 1'-0"

GENERAL NOTES

1. INSULATION - IN P.E.M.B. SYSTEM
   a. ROOF SHALL HAVE NOT LESS THAN R-28 WITH AN EXPOSED, FACED, & BANDED SYSTEM
   b. WALLS SHALL HAVE NOT LESS THAN R-19 WITH AN EXPOSED, FACED, & BANDED "ENERGY SAVER" SYSTEM
2. P.E.M.B. - EXTERIOR SKIN
   a. ROOF PANELS SHALL BE "R PANEL", 26-gauge MINIMUM WITH "STARGUARD" FACTORY FINISH
   b. WALL PANELS SHALL BE "R" TYPE PROFILE, 26-gauge MINIMUM WITH FACTORY COLORED FINISH (70% KYNAR MINIMUM).
3. P.E.M.B. SUPPLIER SHALL PROVIDE GUTTERS AND DOWNSPOUTS AS INDICATED ON DRAWINGS. FINISH TO MATCH WALL PANELS.
4. P.E.M.B. SUPPLIER SHALL PROVIDE ALL FLASHINGS AND TRIM COMPATABLE WITH THE ROOF AND WALL SYSTEMS FOR A COMPLETE AND WATER-TIGHT INSTALLATION.
5. DIMENSIONS SHOWN ARE FROM BUILDING LINE, TO FACE OF STUD WALL FRAME, TO EDGES OF ROUGH OPENINGS, TO CENTERLINE OF FIXTURES UNLESS INDICATED OTHERWISE

ROOM FINISH KEY

101 ROOM NAME
F B W C CEILING HEIGHT

ROOM NUMBER
ROOM NAME
CEILING HEIGHT
CEILING
WALL
BASE
FLOOR
WHERE FINISHES ARE UNFORMAT OR FLOOR, WALL, BASE, AND CEILING RESPECTIVELY

SPECIAL FINISH KEYS
F FLOOR
W WALL OR BASE

A "X" DASH IN PLACE OF LETTER INDICATES MULTIPLE FINISHES IN THE SAME ROOM. REFER SPECIAL FINISH KEYS FOR THESE LOCATIONS. AN "X" INDICATES NO FINISH. SEE ALSO REFLECTED CEILING PLAN.

FLOOR
A SEALED CONCRETE
B STAINED AND SEALED CONCRETE
C RESERVED
D RESERVED

BASE
E NO BASE - WALL FINISH EXTENDS TO FLOOR
F 4" RESILIANT COVE BASE
G RESERVED
H RESERVED

WALLS
J PAINTED ACCORDING TO SUBSTRATE
K METAL LINER P-PANELS TO 8'-0", EXPOSED INSULATION AND P.E.M.B. SYSTEMS ABOVE
L FIBERGLASS REINFORCED PANELS (FRP) TO CEILING
M RESERVED
N RESERVED

CEILINGS
P EXPOSED INSULATION AND P.E.M.B. SYSTEMS
Q 2'x2' SUSPENDED CEILING GRID AND ACOUSTICAL TILES
R 2'x2' SUSPENDED CEILING GRID WITH MOISTURE RESISTANT TILES
S PAINTED ACCORDING TO SUBSTRATE

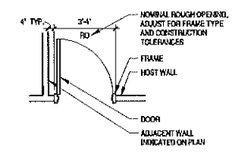

TYPICAL DOOR LOCATION UNLESS INDICATED OTHERWISE

TYPICAL DOOR LOCATION
SCALE: 1/75

JOHNSON & PACE INCORPORATED
ENGINEERING - ARCHITECTURE - SURVEYING
1201 IH 35 SOUTH, SUITE 100
SAN MARCOS, TEXAS 78666
PHONE: (512) 392-1000
WEBSITE: www.johnsonpace.com

SOUTHERN PRECISION SANDS NEW COATING FACILITY VOCA, TEXAS

REVISIONS			
NO	DESCRIPTION	BY	DATE
1	Revision 1 Building Modifications		2/4/2011

PROCESS BUILDING FLOOR PLAN

ISSUED FOR BID

JOB NO. 2369-11-005-02		DATE/TIME	
DRAWN BY JCT	CHECKED BY	APPROVED BY	SCALE As Indicated
SHEET NO. A2.1			REVISION 1

Copyright © 2010, Johnson & Pace Incorporated

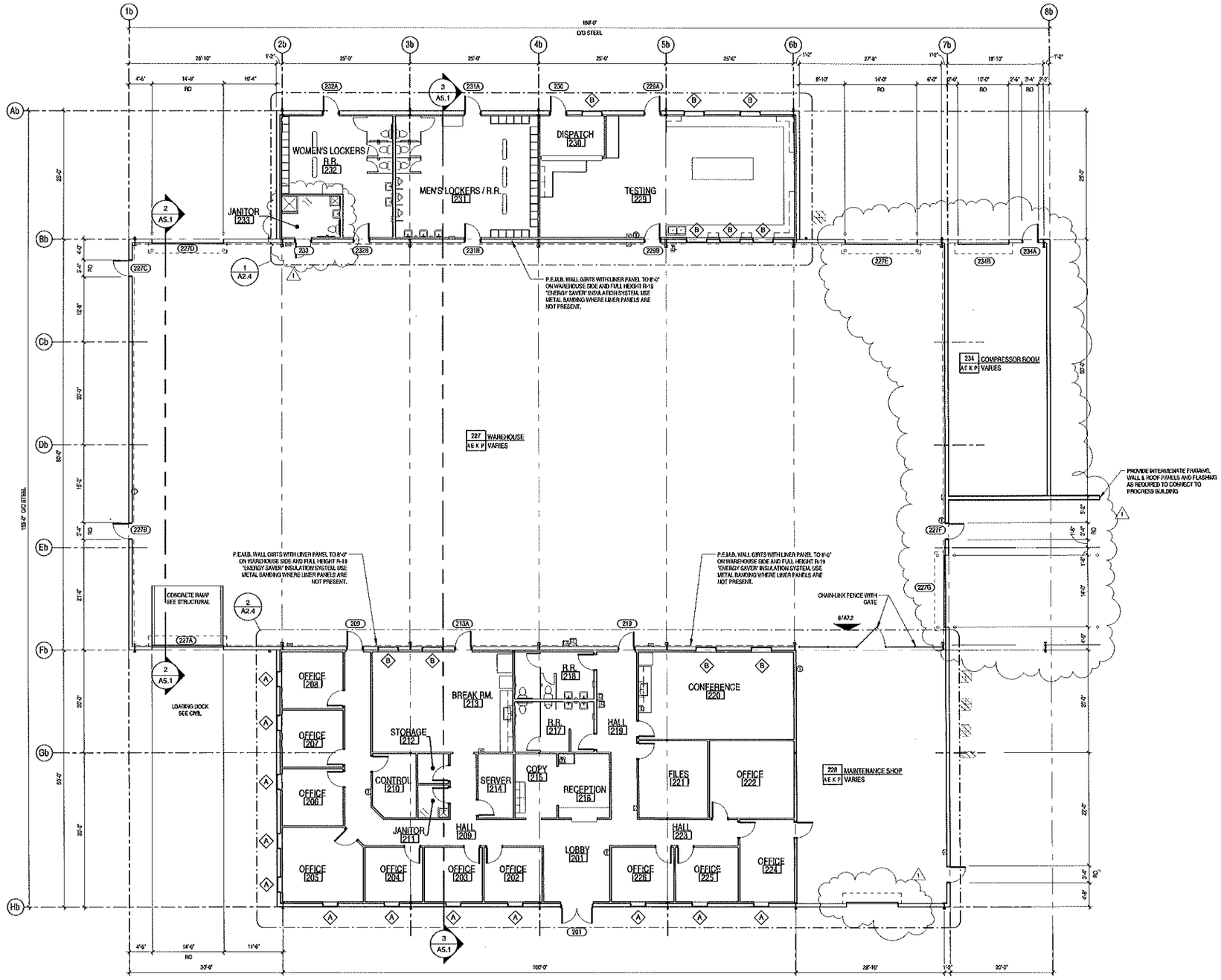

4 WAREHOUSE BUILDING FLOOR PLAN

SCALE: 3/32" = 1'-0"

GENERAL NOTES

1. INSULATION - W/ P.E.M.B. SYSTEM
   a. ROOF SHALL HAVE NOT LESS THAN R-29 WITH AN EXPOSED, FACED, & BANDED SYSTEM
   b. WALLS SHALL HAVE NOT LESS THAN R-19 WITH AN EXPOSED, FACED, & BANDED "ENERGY SAVER" SYSTEM
2. P.E.M.B. - EXTERIOR SKIN
   a. ROOF PANELS SHALL BE "R-PANEL", 26-gauge MINIMUM WITH "STARGUARD" FACTORY FINISH
   b. WALL PANELS SHALL BE "R" TYPE PROFILE, 26-gauge MINIMUM WITH FACTORY COLORED FINISH (70% KYNAR MINIMUM).
3. P.E.M.B. SUPPLIER SHALL PROVIDE GUTTERS AND DOWNSPOUTS AS INDICATED ON DRAWINGS. FINISH TO MATCH WALL PANELS.
4. P.E.M.B. SUPPLIER SHALL PROVIDE ALL FLASHINGS AND TRIM COMPATABLE WITH THE ROOF AND WALL SYSTEMS FOR A COMPLETE AND WATER-TIGHT INSTALLATION
5. DIMENSIONS SHOWN ARE FROM BUILDING LINE, TO FACE OF STUD WALL FRAME, TO EDGES OF ROUGH OPENINGS, TO CENTERLINE OF FIXTURES UNLESS INDICATED OTHERWISE

ROOM FINISH KEY

101 ROOM NAME
F B W C CEILING HEIGHT
CEILING
WALL
BASE
FLOOR

WHITE FINISHES ARE UNIFORM FOR FLOOR, WALL, BASE, AND CEILING RESPECTIVELY

SPECIAL FINISH KEYS
(F) FLOOR
W WALL OR BASE

A-Y DASH IN PLACE OF LETTER INDICATES MULTIPLE FINISHES IN THE SAME ROOM. REFER EPECIAL FINISH KEYS FOR THESE LOCATIONS. AN 'X' INDICATES NONE. SEE ALSO REFLECTED CEILING PLAN.

FLOOR
A SEALED CONCRETE
B STAINED AND SEALED CONCRETE
C RESERVED
D RESERVED

BASE
E NO BASE - WALL FINISH EXTENDS TO FLOOR
F 4" RESILIANT COVE BASE
G RESERVED
H RESERVED

WALLS
J PAINTED ACCORDING TO SUBSTRATE
K METAL LINER R-PANELS TO 8'-0", EXPOSED INSULATION AND P.E.M.B. SYSTEMS ABOVE
L FIBERGLASS REINFORCED PANELS (FRP) TO CEILING
M RESERVED
N RESERVED

CEILINGS
P EXPOSED INSULATION AND P.E.M.B. SYSTEMS
Q 2x2' SUSPENDED CEILING GRID AND ACOUSTICAL TILES
R 2x2' SUSPENDED CEILING GRID WITH MOISTURE RESISTANT TILES
S PAINTED ACCORDING TO SUBSTRATE

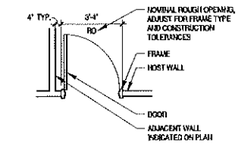

TYPICAL DOOR LOCATION UNLESS INDICATED OTHERWISE

TYPICAL DOOR LOCATION

SCALE: NTS

JOHNSON & PACE INCORPORATED
ENGINEERING - ARCHITECTURE - SURVEYING
1201 WALLACE DR., SUITE 150, PLANO, TEXAS 75093-7616
PHONE: (972) 423-7300
WEBSITE: www.johnsonpace.com

SOUTHERN PRECISION SANDS NEW COATING FACILITY VOCA, TEXAS

NO.	DESCRIPTION	BY	DATE
1	Revision 1 Building Modifications		3/4/2011

REVISIONS

WAREHOUSE FLOOR PLAN

ISSUED FOR BID

JOB NO.	2369-11-009-02
DRAWN BY	JCT
CHECKED BY	
APPROVED BY	
ISSUE DATE	
SCALE	As Indicated
SHEET NO.	A2.3
REVISION NO.	1

Copyright © 2010, Johnson & Pace Incorporated

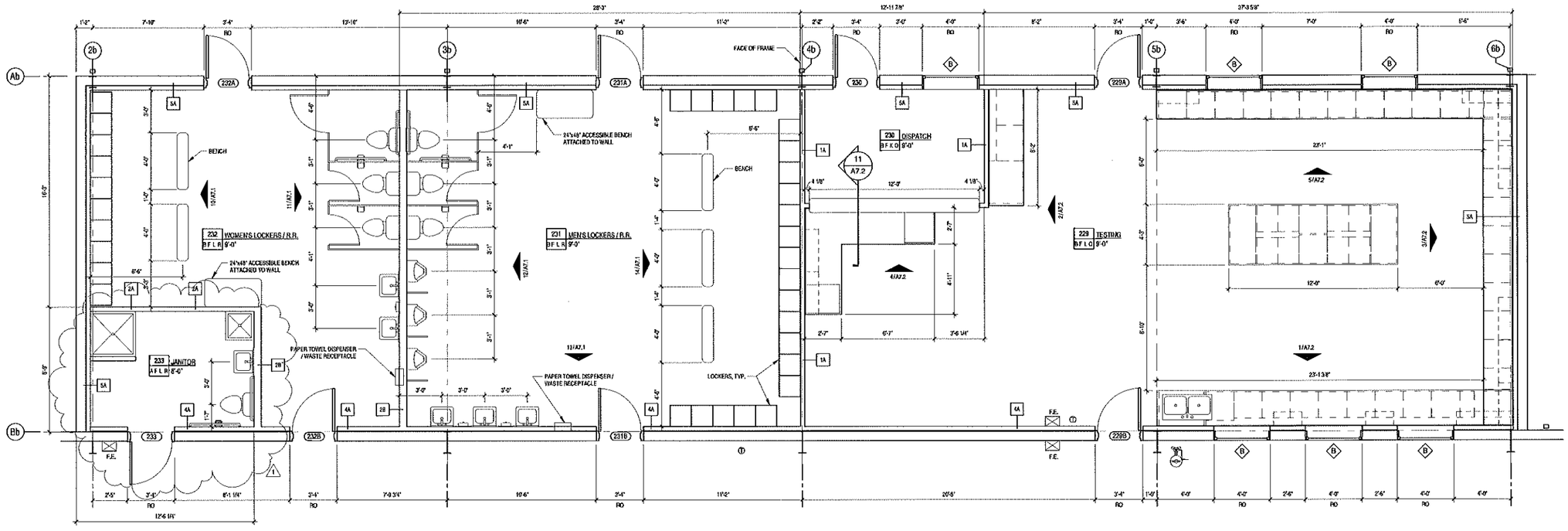

1 ENLARGED LOCKER ROOM FLOOR PLAN
SCALE: 1/4" = 1'-0"

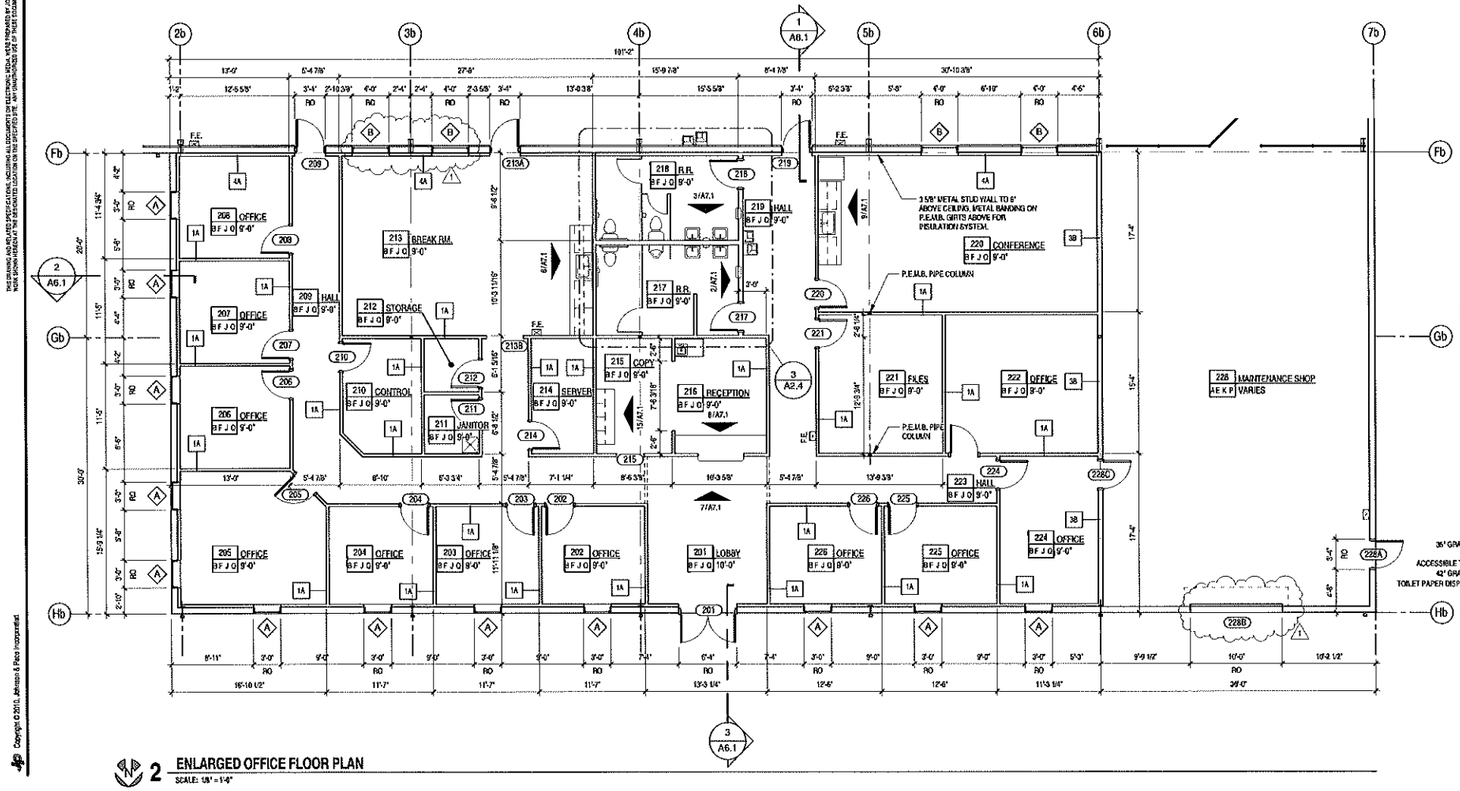

2 ENLARGED OFFICE FLOOR PLAN
SCALE: 1/4" = 1'-0"

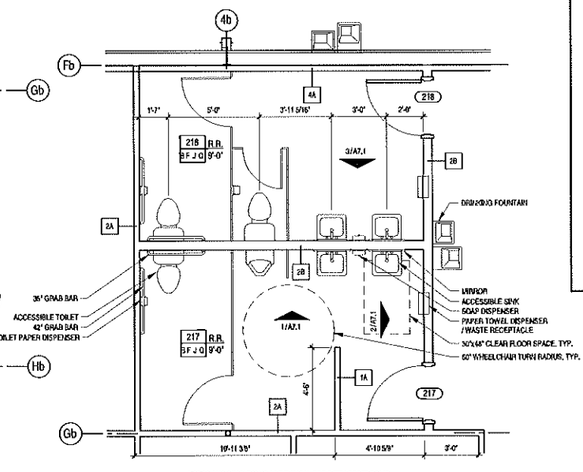

NOTES AND DIMENSIONS ARE TYPICAL FOR BOTH RESTROOMS

3 ENLARGED OFFICE RESTROOMS
SCALE: 1/4" = 1'-0"

ROOM FINISH KEY

ROOM NUMBER
101 ROOM NAME
FB WC CEILING HEIGHT
CEILING / WALL / BASE / FLOOR — WHERE FINISHES ARE UNIFORM FOR FLOOR, WALL, BASE, AND CEILING RESPECTIVELY

SPECIAL FINISH KEYS
F FLOOR
W WALL OR BASE

A "V" DASH IN PLACE OF LETTER INDICATES MULTIPLE FINISHES IN THE SAME ROOM. REFER SPECIAL FINISH KEYS FOR THESE LOCATIONS. ANY V INDICATES NONE. SEE ALSO REFLECTED CEILING PLAN.

FLOOR
A SEALED CONCRETE
B STAINED AND SEALED CONCRETE
C RESERVED
D RESERVED

BASE
E NO BASE - WALL FINISH EXTENDS TO FLOOR
F 4" RESILIANT COVE BASE
G RESERVED
H RESERVED

WALLS
J PAINTED ACCORDING TO SUBSTRATE
K METAL LINER PANELS TO 8'-0", EXPOSED INSULATION AND P.E.M.B. SYSTEMS ABOVE
L FIBERGLASS REINFORCED PANELS (FRP) TO CEILING
M RESERVED
N RESERVED

CEILINGS
P EXPOSED INSULATION AND P.E.M.B. SYSTEMS
Q 2'x2' SUSPENDED CEILING GRID AND ACOUSTICAL TILES
R 2'x2' SUSPENDED CEILING GRID WITH MOISTURE RESISTANT TILES
S PAINTED ACCORDING TO SUBSTRATE

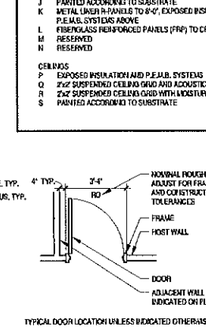

TYPICAL DOOR LOCATION UNLESS INDICATED OTHERWISE

TYPICAL DOOR LOCATION
SCALE: NTS

JOHNSON & PACE INCORPORATED
ENGINEERING • ARCHITECTURE • SURVEYING
1221 SW LOOP 281, SUITE 100
LONGVIEW, TEXAS 75604-7700
(903) 236-0800 / FAX (903) 753-8400
WEBSITE: WWW.JOHNSONPACE.COM

SOUTHERN PRECISION SANDS NEW COATING FACILITY VOCA, TEXAS

REVISIONS

NO.	DESCRIPTION	BY	DATE
1	Revision 1 Building Modifications		2/4/2011

WAREHOUSE ENLARGED FLOOR PLANS

ISSUED FOR BID

JOB NO. 2505-11-006-02	ISSUE DATE:		
DRAWN BY: JJT	CHECKED BY:	SCALE: As indicated	REVISION NO. 1
	APPROVED BY:		
SHEET NO. A2.4			

Copyright © 2010, Johnson & Pace Incorporated

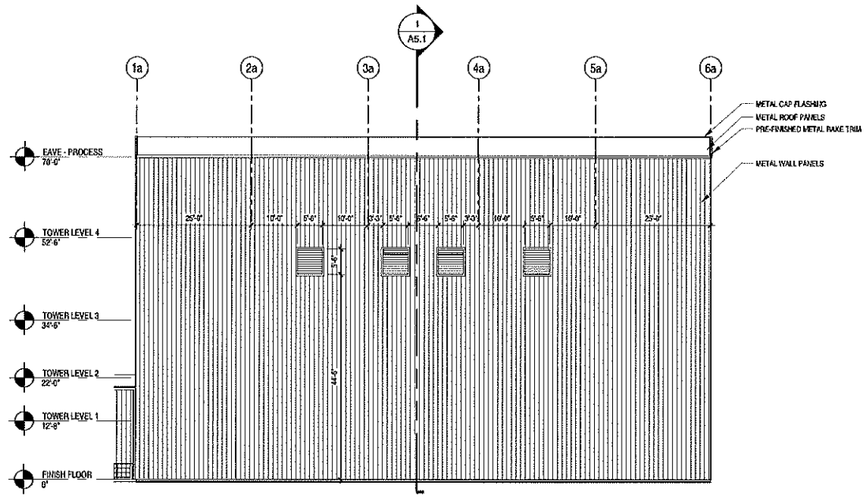

1 **PROCESS BUILDING NORTH**
SCALE: 1/16" = 1'-0"

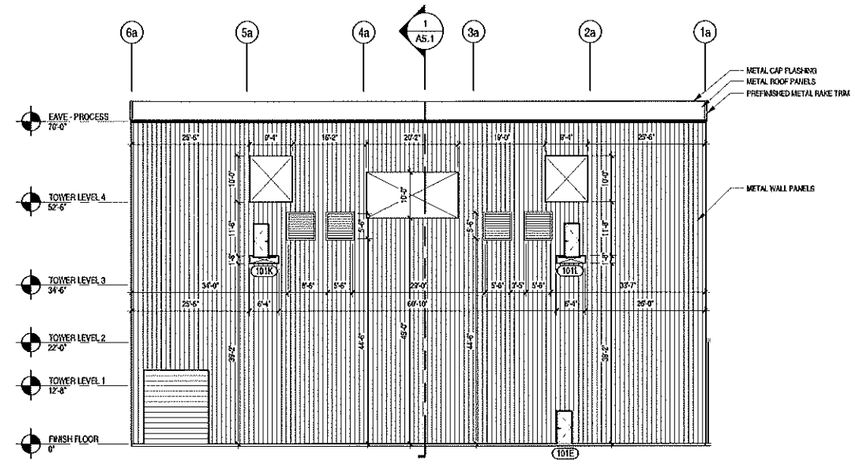

2 **PROCESS BUILDING SOUTH**
SCALE: 1/16" = 1'-0"

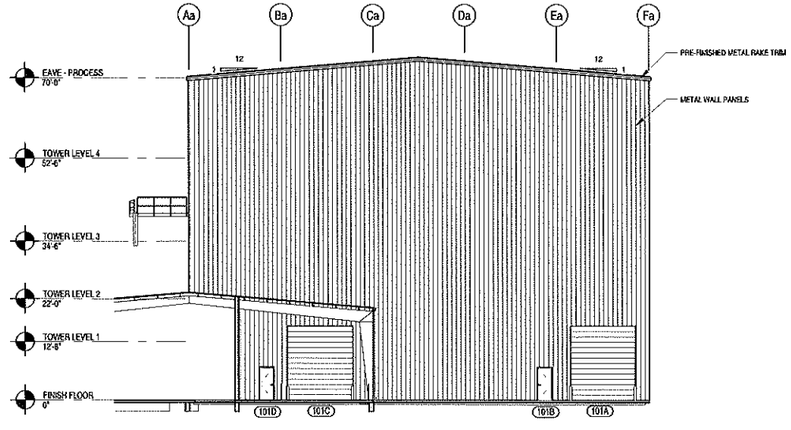

3 **PROCESS BUILDING EAST**
SCALE: 1/16" = 1'-0"

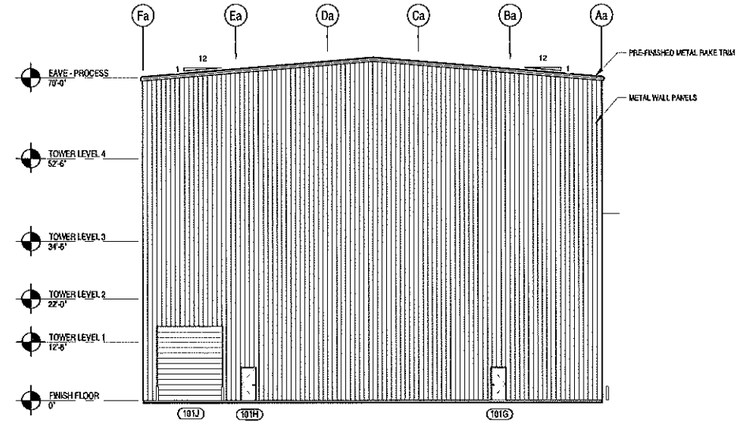

4 **PROCESS BUILDING WEST**
SCALE: 1/16" = 1'-0"

THIS DRAWING AND ANY REPRODUCTION, REVISION OR COMPUTER ELECTRONIC DATA, WHICH WERE PREPARED BY OR ON BEHALF OF JOHNSON & PACE, INCORPORATED, IS THE PROPERTY OF JOHNSON & PACE, INCORPORATED, AND MAY BE USED ONLY AT THE DISCRETION OF JOHNSON & PACE, INCORPORATED. THE INFORMATION CONTAINED HEREIN MAY BE USED ONLY FOR THE PURPOSE FOR WHICH IT IS PROVIDED AND SHALL NOT BE CHANGED OR OTHERWISE MANIPULATED OR ALTERED, NOR SHALL ANY OTHER PERSON OR ENTITY USE THE INFORMATION CONTAINED HEREIN WITHOUT THE EXPRESS WRITTEN CONSENT OF JOHNSON & PACE, INCORPORATED. ANY REPRODUCTION OR ALTERATION IS STRICTLY PROHIBITED AND SHALL VOID THE WARRANTY AND EXPRESSED WARRANTIES AS AGREED UPON BETWEEN JOHNSON & PACE, INCORPORATED AND THE CLIENT. ALL OTHER RIGHTS ARE RESERVED UNDER COPYRIGHT LAWS OF THE UNITED STATES. ANY UNAUTHORIZED USE OF THESE DOCUMENTS, INCLUDING BY PRINT, LAYOUT AND REPRODUCTION OF ALTERATION, IS STRICTLY PROHIBITED AND SHALL VOID THE WARRANTY AND EXPRESSED WARRANTIES AS AGREED UPON BETWEEN JOHNSON & PACE, INCORPORATED AND THE CLIENT.

Filename: C:\Users\jcarter\Documents\2505-11-006-02 Vol3_SB.dwg Plotted: 3/14/2011 11:19:19 AM
Copyright © 2010, Johnson & Pace Incorporated

JOHNSON & PACE INCORPORATED
ENGINEERING • ARCHITECTURE • SURVEYING
7201 IH 10 EAST 251, SUITE 101
LONGVIEW, TEXAS 75605
(903) 663-2100 FAX (903) 663-2101
WEBSITE: WWW.JPINCORP.COM

SOUTHERN PRECISION SANDS
NEW COATING FACILITY
VOCA, TEXAS

REVISIONS

NO.	DESCRIPTION	BY	DATE

PROCESS BUILDING EXTERIOR ELEVATIONS

ISSUED FOR BID

JOB NO. 2505-11-006-02		ISSUE DATE:	
DRAWN BY: JCT	CHECKED BY:	APPROVED BY:	SCALE: 1/16" = 1'-0"
SHEET NO.: A3.1			REVISION NO:

Filename: O:\Users\jct\Documents\2569-11-006-02 Arch_Joint.rvt Plotted: 2/4/2011 11:01:02 AM

Copyright © 2010, Johnson & Pace Incorporated

THIS DRAWING AND RELATED SPECIFICATIONS, INCLUDING ALL DOCUMENTS ON ELECTRONIC MEDIA, WERE PREPARED BY JOHNSON AND PACE INCORPORATED (JP) AS INSTRUMENTS OF SERVICE AND SHALL REMAIN THE PROPERTY OF JP. THE INFORMATION SHOWN HEREON SHALL BE USED ONLY BY THE CLIENT TO WHOM SERVICES ARE RENDERED AND ONLY FOR THE PURPOSE OF DESIGNING, CONSTRUCTING, OR INSTALLING THE WORK SHOWN HEREON AT THE DESIGNATED LOCATION ON THE SPECIFIED SITE. ANY UNAUTHORIZED USE OF THESE DOCUMENTS, INCLUDING WITHOUT LIMITATION REPRODUCTION OR ALTERATION, IS STRICTLY PROHIBITED AND SHALL CAUSE THE WAIVER OF ANY EXPRESSED WARRANTIES AND ALSO SEVER ANY LIABILITIES WHICH MAY ARISE FROM THE CONSTRUCTION, USE OR RESULT OF SUCH UNAUTHORIZED USE OR CHANGES.

JOB NO: 2569-11-006-02		ISSUE DATE:
DRAWN BY: JCT	CHECKED BY:	APPROVED BY:	SCALE: 1/8" = 1'-0"
SHEET NO: A3.2		REVISION NO: 1

WAREHOUSE EXTERIOR ELEVATIONS

ISSUED FOR BID

REVISIONS

NO.	DESCRIPTION	By	DATE
1	Revision 1 Building Modifications		2/4/2011

SOUTHERN PRECISION SANDS NEW COATING FACILITY VOCA, TEXAS

JOHNSON & PACE INCORPORATED
ENGINEERING • ARCHITECTURE • SURVEYING
1201 NW LOOP 281, SUITE 100
LONGVIEW, TEXAS 75604
(903)753-0820 FAX (903)753-8805
website: www.johnsonpace.com

GENERAL NOTES

1. P.E.M.B. - ROOF PANELS SHALL BE "R-PANEL", 26 ga MINIMUM WITH "STANDARD" FACTORY FINISH.
2. P.E.M.B. SUPPLIER SHALL PROVIDE GUTTERS AND DOWNSPOUTS AS INDICATED ON DRAWINGS. FINISH TO MATCH WALL PANELS.
3. P.E.M.B. SUPPLIER SHALL PROVIDE ALL FLASHINGS AND TRIM COMPATIABLE WITH THE ROOF SYSTEM FOR A COMPLETE AND FINISHED INSTALLATION.
4. P.E.M.B. SUPPLIER TO PROVIDE "R-PANELS" WALL AND ROOF AND TRIM TO ENCLOSE AND MAKE WATER-TIGHT THE PERSONNEL SHACK. STRUCTURAL FRAMING IS LIGHT-GAUGE METAL AND WOOD SHEATHING.

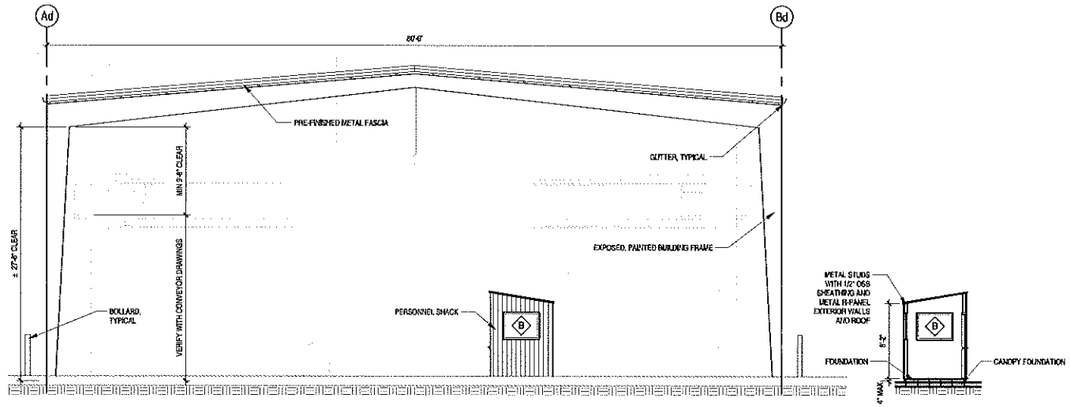

3 LOAD-IN / LOAD-OUT CANOPY ELEVATION
SCALE: 1/8" = 1'-0"

2 PERSONNEL SHACK
SCALE: 1/8" = 1'-0"

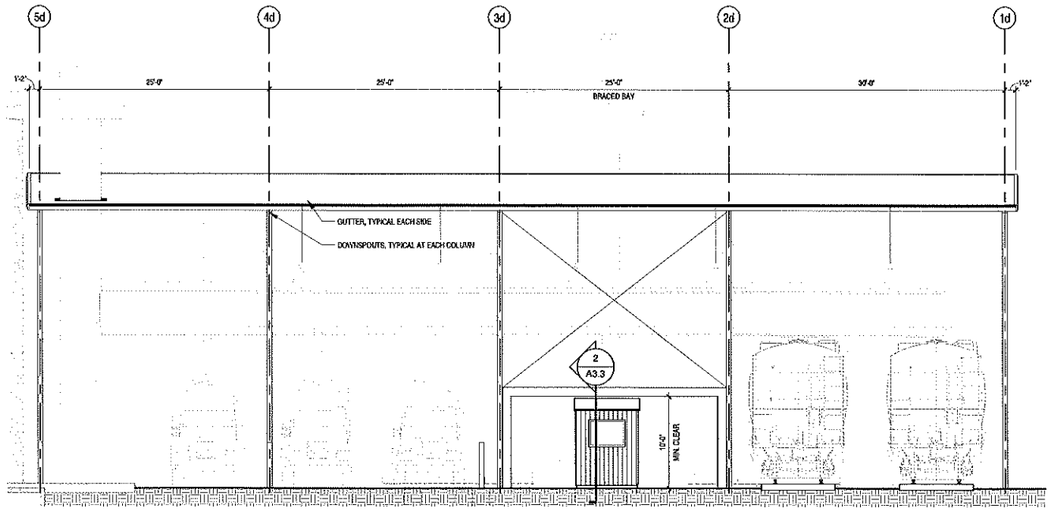

4 LOAD-IN / LOAD-OUT CANOPY ELEVATION
SCALE: 1/8" = 1'-0"

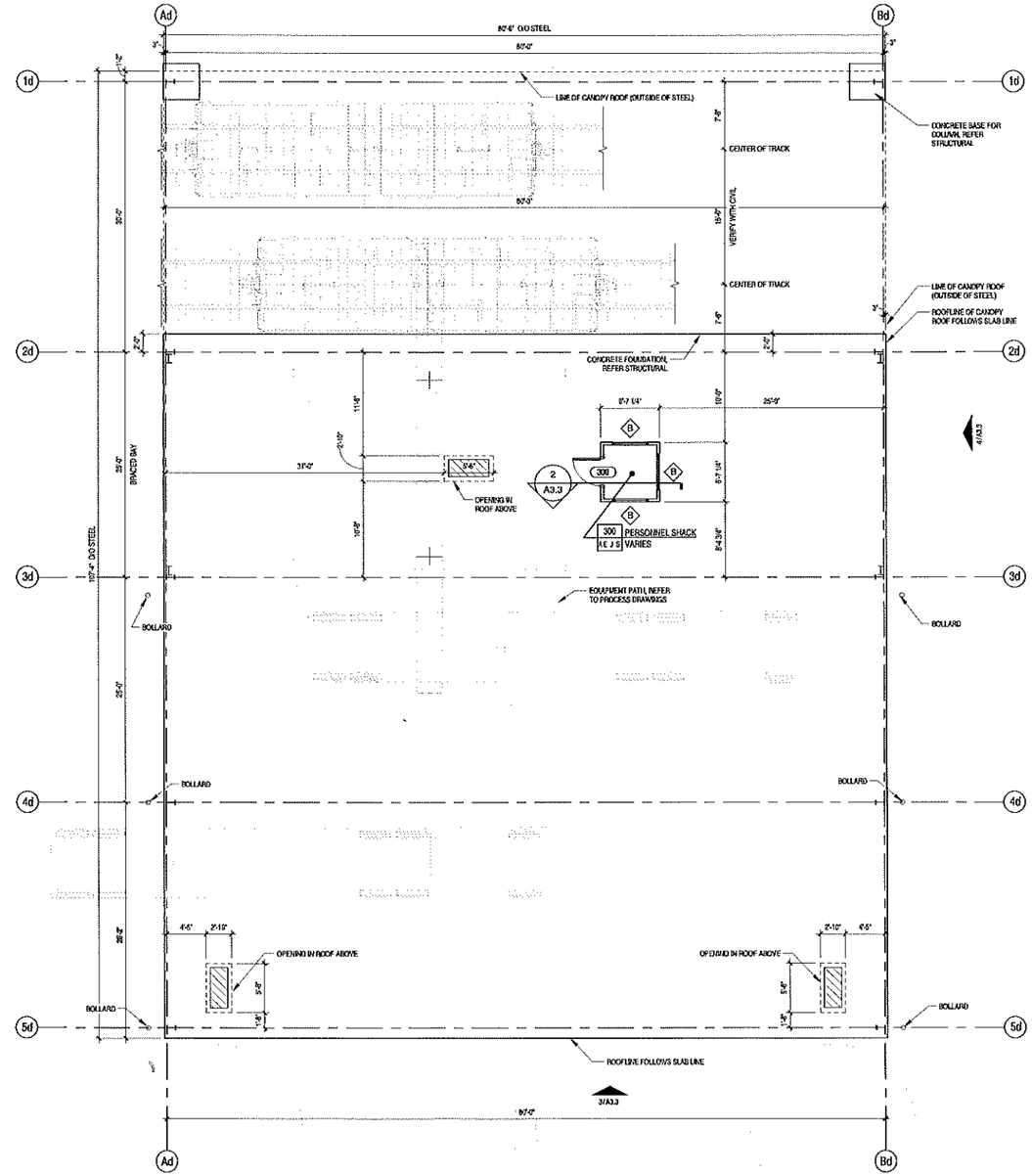

1 LOAD-IN / LOAD-OUT CANOPY FLOOR PLAN
SCALE: 1/8" = 1'-0"

JOHNSON & PACE INCORPORATED
ENGINEERING • ARCHITECTURE • SURVEYING
1201 NW LEE, STE. 101
LAWTON, OKLAHOMA 73507
(580) 357-1500 FAX (580) 357-1503
WEBSITE: www.johnsonpace.com

SOUTHERN PRECISION SANDS NEW COATING FACILITY VOCA, TEXAS

REVISIONS

NO.	DESCRIPTION	BY	DATE
1	Revision 1 Building Modifications		2/4/2011

LOAD-IN / LOAD-OUT CANOPY STRUCTURE

ISSUED FOR BID

JOB NO.	2505-11-006-02
DRAWN BY	VGA
DESIGNED BY	
APPROVED BY	
SCALE	As indicated
ISSUE DATE	
REVISION NO.	1
SHEET NO.	A3.3

Copyright © 2010, Johnson & Pace Incorporated

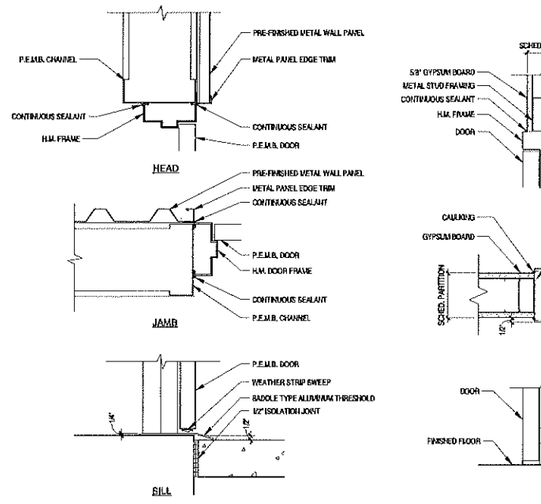

1 TYPICAL P.E.M.B. DOOR FRAME
SCALE: 1 1/2" = 1'-0"

2 TYPICAL INTERIOR DOOR FRAME
SCALE: 1 1/2" = 1'-0"

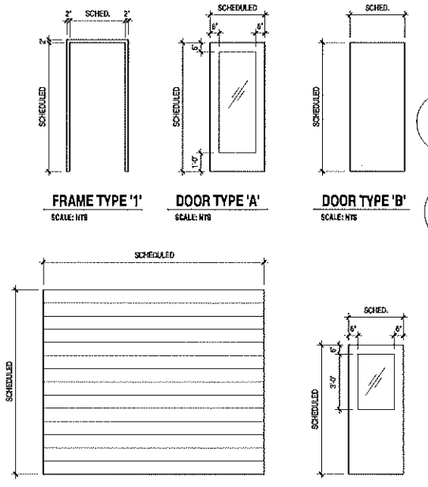

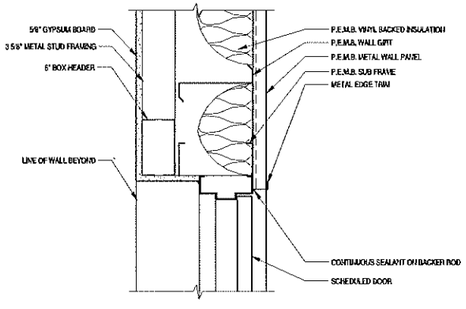

3 P.E.M.B. DOOR FRAME W/ GYP. RETURN
SCALE: 1 1/2" = 1'-0"

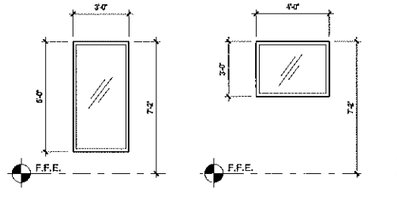

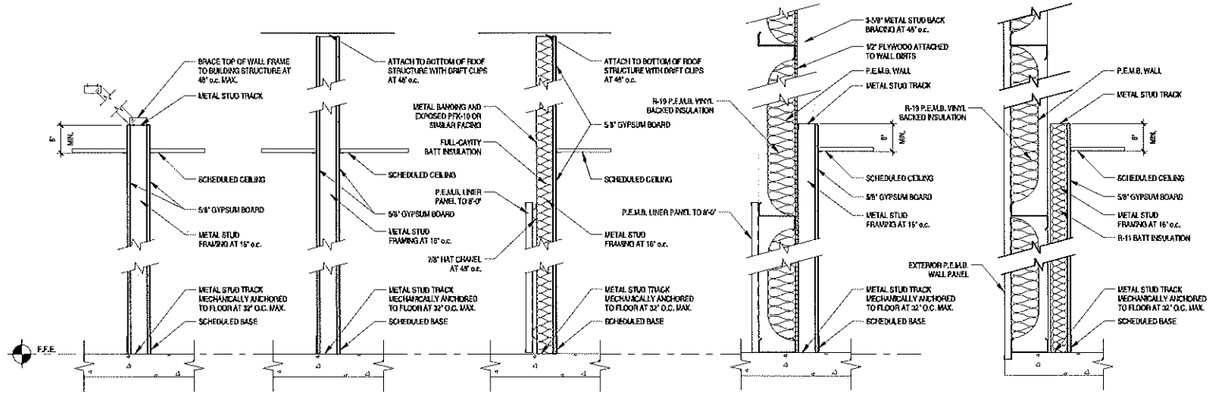

1A	3 5/8" METAL STUD FRAMING 4 7/8" TOTAL PARTITION	2A	3 5/8" METAL STUD FRAMING 4 7/8" TOTAL PARTITION	3A	3 5/8" METAL STUD FRAMING 6 5/8" NOMINAL PARTITION
1B	6" METAL STUD FRAMING 7 1/4" TOTAL PARTITION	2B	6" METAL STUD FRAMING 7 1/4" TOTAL PARTITION	3B	6" METAL STUD FRAMING 9" NOMINAL PARTITION

4A	3 5/8" METAL STUD FRAMING AT P.E.M.B WALL WITH LINER PANEL TO 8'-0" A.F.F.	5A	3 5/8" METAL STUD FRAMING AT EXTERIOR P.E.M.B WALL WITH FULL HEIGHT LINER PANEL
4B	6" METAL STUD FRAMING AT P.E.M.B WALL WITH LINER PANEL TO 8'-0" A.F.F.	5B	6" METAL STUD FRAMING AT EXTERIOR P.E.M.B WALL WITH FULL HEIGHT LINER PANEL

4 PARTITION TYPES
SCALE: 3/4" = 1'-0"

DOOR SCHEDULE

OPENING LABEL	OPENING WIDTH	OPENING HEIGHT	DOOR THICKNESS	DOOR MATERIAL	DOOR FINISH	DOOR TYPE	FRAME MATERIAL	FRAME FINISH	FRAME TYPE	HARDWARE	OPENING LABEL	COMMENTS
101A	14'-0"	16'-0"	2"	GALV. STEEL, INSULATED	MFR	C	STEEL ANGLE GUIDES	MFR		OP, MFR	101A	IN P.E.M.B. WALL - OVERHEAD DOOR
101B	3'-0"	7'-0"	1 3/4"	INSULATED METAL	PAINT	B	HOLLOW METAL	PAINT	1	CL, ED, LE, TH, WS	101B	IN P.E.M.B. WALL - EXIT
101C	14'-0"	16'-0"	2"	GALV. STEEL, INSULATED	MFR	C	STEEL ANGLE GUIDES	MFR		OP, MFR	101C	IN P.E.M.B. WALL - OVERHEAD DOOR
101D	3'-0"	7'-0"	1 3/4"	INSULATED METAL	PAINT	B	HOLLOW METAL	PAINT	1	CL, ED, LE, TH, WS	101D	IN P.E.M.B. WALL - TO WAREHOUSE
101E	3'-0"	7'-0"	1 3/4"	INSULATED METAL	PAINT	B	HOLLOW METAL	PAINT	1	CL, ED, LE, TH, WS	101E	IN P.E.M.B. WALL - EXIT
101F	14'-0"	16'-0"	2"	GALV. STEEL, INSULATED	MFR	C	STEEL ANGLE GUIDES	MFR		OP, MFR	101F	IN P.E.M.B. WALL - OVERHEAD DOOR
101G	3'-0"	7'-0"	1 3/4"	INSULATED METAL	PAINT	B	HOLLOW METAL	PAINT	1	CL, ED, LE, TH, WS	101G	IN P.E.M.B. WALL - EXIT
101H	3'-0"	7'-0"	1 3/4"	INSULATED METAL	PAINT	B	HOLLOW METAL	PAINT	1	CL, ED, LE, TH, WS	101H	IN P.E.M.B. WALL - EXIT
101J	14'-0"	16'-0"	2"	GALV. STEEL, INSULATED	MFR	C	STEEL ANGLE GUIDES	MFR		OP, MFR	101J	IN P.E.M.B. WALL - OVERHEAD DOOR
101K	3'-0"	7'-0"	1 3/4"	INSULATED METAL	PAINT	B	HOLLOW METAL	PAINT	1	CL, LE, WS	101K	IN P.E.M.B. WALL - SEE A3.1 FOR LOCATION
101L	3'-0"	7'-0"	1 3/4"	INSULATED METAL	PAINT	B	HOLLOW METAL	PAINT	1	CL, LE, WS	101L	IN P.E.M.B. WALL - SEE A3.1 FOR LOCATION
102	3'-0"	7'-0"	1 3/4"	INSULATED METAL	PAINT	B	HOLLOW METAL	PAINT	1	CL, LP, WS	102	RESTROOM
103	3'-0"	7'-0"	1 3/4"	INSULATED METAL	PAINT	B	HOLLOW METAL	PAINT	1	CL, LP, WS	103	RESTROOM
104	3'-0"	7'-0"	1 3/4"	INSULATED METAL	PAINT	B	HOLLOW METAL	PAINT	1	LS	104	STORAGE
201	6'-0"	7'-0"	1 3/4"	INSULATED METAL	PAINT	A	HOLLOW METAL	PAINT	1	CL, ED, LE, TH, WS	201	IN P.E.M.B. WALL - PAIR OF FULL LITE DOORS
202	3'-0"	7'-0"	1 3/4"	SOLID CORE WOOD	STAIN	B	HOLLOW METAL	PAINT	1	LO	202	OFFICE
203	3'-0"	7'-0"	1 3/4"	SOLID CORE WOOD	STAIN	B	HOLLOW METAL	PAINT	1	LO	203	OFFICE
204	3'-0"	7'-0"	1 3/4"	SOLID CORE WOOD	STAIN	B	HOLLOW METAL	PAINT	1	LO	204	OFFICE
205	3'-0"	7'-0"	1 3/4"	SOLID CORE WOOD	STAIN	B	HOLLOW METAL	PAINT	1	LO	205	OFFICE
206	3'-0"	7'-0"	1 3/4"	SOLID CORE WOOD	STAIN	B	HOLLOW METAL	PAINT	1	LO	206	OFFICE
207	3'-0"	7'-0"	1 3/4"	SOLID CORE WOOD	STAIN	B	HOLLOW METAL	PAINT	1	LO	207	OFFICE
208	3'-0"	7'-0"	1 3/4"	SOLID CORE WOOD	STAIN	B	HOLLOW METAL	PAINT	1	LO	208	OFFICE
209	3'-0"	7'-0"	1 3/4"	INSULATED METAL	PAINT	B	HOLLOW METAL	PAINT	1	CL, LE, TH, WS	209	IN P.E.M.B. WALL - HALL
210	3'-0"	7'-0"	1 3/4"	SOLID CORE WOOD	STAIN	B	HOLLOW METAL	PAINT	1	LS	210	STORAGE
211	3'-0"	7'-0"	1 3/4"	SOLID CORE WOOD	STAIN	B	HOLLOW METAL	PAINT	1	LS	211	JANITOR
212	3'-0"	7'-0"	1 3/4"	SOLID CORE WOOD	STAIN	B	HOLLOW METAL	PAINT	1	LS	212	STORAGE
213A	3'-0"	7'-0"	1 3/4"	INSULATED METAL	PAINT	D	HOLLOW METAL	PAINT	1	CL, LE	213A	IN P.E.M.B. WALL - BREAK ROOM
213B	4'-0"	7'-0"	–	–	PAINT	–	HOLLOW METAL	PAINT	1	–	213B	CASED OPENING
214	3'-0"	7'-0"	1 3/4"	SOLID CORE WOOD	STAIN	B	HOLLOW METAL	PAINT	1	LS	214	SERVER
215	3'-0"	7'-0"	–	–	PAINT	–	HOLLOW METAL	PAINT	1	–	215	CASED OPENING
217	3'-0"	7'-0"	1 3/4"	SOLID CORE WOOD	STAIN	B	HOLLOW METAL	PAINT	1	CL, PP, PU	217	RESTROOM
218	3'-0"	7'-0"	1 3/4"	SOLID CORE WOOD	STAIN	B	HOLLOW METAL	PAINT	1	CL, PP, PU	218	RESTROOM
219	3'-0"	7'-0"	1 3/4"	INSULATED METAL	PAINT	B	HOLLOW METAL	PAINT	1	CL, LE, TH, WS	219	IN P.E.M.B. WALL - HALL
220	3'-0"	7'-0"	1 3/4"	SOLID CORE WOOD	STAIN	B	HOLLOW METAL	PAINT	1	LP	220	CONFERENCE
221	3'-0"	7'-0"	1 3/4"	SOLID CORE WOOD	STAIN	B	HOLLOW METAL	PAINT	1	LO	221	FILES
222	3'-0"	7'-0"	1 3/4"	SOLID CORE WOOD	STAIN	B	HOLLOW METAL	PAINT	1	LO	222	OFFICE
224	3'-0"	7'-0"	1 3/4"	SOLID CORE WOOD	STAIN	B	HOLLOW METAL	PAINT	1	LO	224	OFFICE
225	3'-0"	7'-0"	1 3/4"	SOLID CORE WOOD	STAIN	B	HOLLOW METAL	PAINT	1	LO	225	OFFICE
226	3'-0"	7'-0"	1 3/4"	SOLID CORE WOOD	STAIN	B	HOLLOW METAL	PAINT	1	LO	226	OFFICE
227A	14'-0"	16'-0"	2"	GALV. STEEL, INSULATED	MFR	C	STEEL ANGLE GUIDES	MFR		OP, MFR	227A	IN P.E.M.B. WALL - OVERHEAD DOOR
227B	3'-0"	7'-0"	1 3/4"	INSULATED METAL	PAINT	B	HOLLOW METAL	PAINT	1	CL, ED, LE, TH, WS	227B	IN P.E.M.B. WALL - EXIT
227C	3'-0"	7'-0"	1 3/4"	INSULATED METAL	PAINT	B	HOLLOW METAL	PAINT	1	CL, ED, LE, TH, WS	227C	IN P.E.M.B. WALL - EXIT
227D	14'-0"	16'-0"	2"	GALV. STEEL, INSULATED	MFR	C	STEEL ANGLE GUIDES	MFR		OP, MFR	227D	IN P.E.M.B. WALL - OVERHEAD DOOR
227E	14'-0"	16'-0"	2"	GALV. STEEL, INSULATED	MFR	C	STEEL ANGLE GUIDES	MFR		OP, MFR	227E	IN P.E.M.B. WALL - OVERHEAD DOOR
227F	3'-0"	7'-0"	1 3/4"	INSULATED METAL	PAINT	B	HOLLOW METAL	PAINT	1	CL, ED, LE, TH, WS	227F	IN P.E.M.B. WALL - TO PROCESS
227G	14'-0"	16'-0"	2"	GALV. STEEL, INSULATED	MFR	C	STEEL ANGLE GUIDES	MFR		OP, MFR	227G	IN P.E.M.B. WALL - OVERHEAD DOOR
228A	3'-0"	7'-0"	1 3/4"	INSULATED METAL	PAINT	B	HOLLOW METAL	PAINT	1	CL, ED, LE, TH, WS	228A	IN P.E.M.B. WALL - MAINTENCE
228B	12'-0"	10'-0"	2"	GALV. STEEL, INSULATED	MFR	C	STEEL ANGLE GUIDES	MFR		OP, MFR	228B	IN P.E.M.B. WALL - OVERHEAD DOOR
228C	3'-0"	7'-0"	1 3/4"	INSULATED METAL	PAINT	B	HOLLOW METAL	PAINT	1	CL, ED, LE, TH, WS	228C	OFFICE
229A	3'-0"	7'-0"	1 3/4"	INSULATED METAL	PAINT	D	HOLLOW METAL	PAINT	1	CL, LE	229A	IN P.E.M.B. WALL - TESTING
229B	3'-0"	7'-0"	1 3/4"	INSULATED METAL	PAINT	B	HOLLOW METAL	PAINT	1	CL, LE	229B	IN P.E.M.B. WALL - TESTING
230	3'-0"	7'-0"	1 3/4"	INSULATED METAL	PAINT	D	HOLLOW METAL	PAINT	1	CL, LE	230	IN P.E.M.B. WALL - DISPATCH
231A	3'-0"	7'-0"	1 3/4"	INSULATED METAL	PAINT	B	HOLLOW METAL	PAINT	1	CL, LE, TH, WS	231A	IN P.E.M.B. WALL - LOCKER ROOM
231B	3'-0"	7'-0"	1 3/4"	INSULATED METAL	PAINT	B	HOLLOW METAL	PAINT	1	CL, LP	231B	IN P.E.M.B. WALL - LOCKER ROOM
232A	3'-0"	7'-0"	1 3/4"	INSULATED METAL	PAINT	B	HOLLOW METAL	PAINT	1	CL, LE, TH, WS	232A	IN P.E.M.B. WALL - LOCKER ROOM
232B	3'-0"	7'-0"	1 3/4"	INSULATED METAL	PAINT	B	HOLLOW METAL	PAINT	1	CL, LP	232B	IN P.E.M.B. WALL - LOCKER ROOM
233	3'-0"	7'-0"	1 3/4"	INSULATED METAL	PAINT	B	HOLLOW METAL	PAINT	1	LS	233	IN P.E.M.B. WALL - JANITOR
234A	3'-0"	7'-0"	1 3/4"	INSULATED METAL	PAINT	B	HOLLOW METAL	PAINT	1	CL, ED, LE, TH, WS	234A	
234B	10'-0"	10'-0"	2"	GALV. STEEL, INSULATED	MFR	C	STEEL ANGLE GUIDES	MFR		OP, MFR	234B	IN P.E.M.B. WALL - OVERHEAD DOOR
235	3'-0"	7'-0"	1 3/4"	INSULATED METAL	MFR	B	HOLLOW METAL	PAINT	1		235	MEZZANINE ACCESS DOOR
300	3'-0"	7'-0"	1 3/4"	INSULATED METAL	PAINT	D	HOLLOW METAL	PAINT	1	LE, TH, WS	300	PERSONNEL SHACK

GENERAL NOTES

1. OVERHEAD DOOR OPERATORS SHALL BE 208V, 3 PHASE, INDUSTRIAL-DUTY, UNIVERSAL-MOUNT FRAME DESIGN WITH EMERGENCY CHAIN HOIST OPERATOR, AND ELECTRIC INTERLOCK. PROVIDE PHOTO ELECTRIC SWITCH ONLY IF REQUIRED BY LOCAL CODE. ACCEPTABLE MANUFACTURERS ARE LIFTMASTER "M" SERIES AND OVERHEAD DOOR "400" SERIES OF COMMERCIAL OPERATORS. OPERATORS MUST BE SELECTED AND SIZED ACCORDING THE APPLICATION WITH 1 hp MINIMUM. ALTERNATES MUST BE APPROVED BY OWNER.
2. OVERHEAD DOOR TRACKS SHALL BE 3" HEAVY-DUTY REVERSE ANGLE. COORDINATE WITH MECHANICAL AND ELECTRICAL DEVICES.
3. HARDWARE NOT INDICATED ON THE SCHEDULE SHALL BE PROVIDED BY SPECIFICATIONS AND INCLUDES HINGES, SILENCERS, AND STOPS.

HARDWARE LEGEND

CH	CONTINUOUS HINGE
CL	CLOSER, SURFACE MOUNTED, ADA COMPLIANT (INTEGRAL ON STOREFRONT DOORS)
EO	EXIT DEVICE (PANIC BAR)
ES	ELECTRIC STRIKE
KC	KEYED CYLINDER - MORTISE OR TAPPERED BASED ON ASSEMBLY
LE	LOCK SET - ENTRANCE FUNCTION (ANSI F109), KEYED, LEVER HANDLE
LO	LOCK SET - OFFICE FUNCTION (ANSI F76), KEYED, LEVER HANDLE
LP	LATCH SET - PASSAGE FUNCTION (ANSI F75) LEVER HANDLE
LR	LATCH SET - PRIVACY FUNCTION (ANSI F76) LEVER HANDLE
LS	LOCK SET - STOREROOM FUNCTION (ANSI F84), KEYED, LEVER HANDLE
OP	OPENER - MOTOR OPERATOR
PP	PULL PLATE - 3"x12" PLATE WITH PULL HANDLE
PU	PUSH PLATE - 3"x12" PLATE
SS	SOUND SEALS - CONTINUOUS SOUND ISOLATION GASKETING
TH	THRESHOLD - ADA COMPLIANT AND FOR MOISTURE PROTECTION
WS	WEATHERSTRIPPING - THERMAL AND MOISTURE PROTECTION GASKETING
MFR	ALL HARDWARE NOT OTHERWISE LISTED IS PROVIDED BY THE MANUFACTURER

ROOM FINISH AND AREA SCHEDULE

NUMBER	ROOM NAME	FINISH: FLOOR	FINISH: BASE	FINISH: WALL	FINISH: CEILING	CEILING HEIGHT	ROOM DATA (These values are accurate in most cases, they are provided for use as a courtesy at your own risk.): Perimeter	Area	Volume
101	PROCESS	A	E	K	P	VARIES	444'-8"	11,967 SF	564,339 CF
102	MEN	A	E	L	R	9'-0"	41'-5"	106 SF	850 CF
103	WOMEN	A	E	L	R	9'-0"	39'-6"	55 SF	438 CF
104	STORAGE	A	E	L	S	9'-0"	20'-10"	27 SF	210 CF
201	LOBBY	B	F	J	Q	10'-0"	209 SF	2,094 CF	
202	OFFICE	B	F	J	Q	9'-0"	43'-10"	120 SF	1,079 CF
203	OFFICE	B	F	J	Q	9'-0"	43'-10"	120 SF	1,079 CF
204	OFFICE	B	F	J	Q	9'-0"	43'-10"	120 SF	1,079 CF
205	OFFICE	B	F	J	Q	9'-0"	58'-0"	222 SF	2,001 CF
206	OFFICE	B	F	J	Q	9'-0"	46'-3"	133 SF	1,200 CF
207	OFFICE	B	F	J	Q	9'-0"	46'-3"	133 SF	1,200 CF
208	OFFICE	B	F	J	Q	9'-0"	46'-2"	133 SF	1,165 CF
209	HALL	B	F	J	Q	9'-0"	174'-5"	425 SF	3,824 CF
210	CONTROL	B	F	J	Q	9'-0"	46'-8"	104 SF	937 CF
211	JANITOR	B	F	J	Q	9'-0"	24'-10"	39 SF	347 CF
212	STORAGE	B	F	J	Q	9'-0"	20'-8"	35 SF	314 CF
213	BREAK RM.	B	F	J	Q	9'-0"	93'-9"	534 SF	4,807 CF
214	SERVER	B	F	J	Q	9'-0"	38'-8"	85 SF	765 CF
215	COPY	B	F	J	Q	9'-0"	41'-10"	104 SF	937 CF
216	RECEPTION	B	F	J	Q	9'-0"	45'-4"	126 SF	1,137 CF
217	R.R.	B	F	J	Q	9'-0"	39'-8"	151 SF	1,207 CF
218	R.R.	B	F	J	Q	9'-0"	49'-0"	143 SF	1,143 CF
219	HALL	B	F	J	Q	9'-0"	80'-8"	230 SF	1,884 CF
220	CONFERENCE	B	F	J	Q	9'-0"	94'-8"	515 SF	4,633 CF
221	FILES	B	F	J	Q	9'-0"	57'-0"	293 SF	1,823 CF
222	OFFICE	B	F	J	Q	9'-0"	63'-2"	248 SF	2,238 CF
223	HALL	B	F	J	Q	9'-0"	66'-3"	128 SF	1,150 CF
224	OFFICE	B	F	J	Q	9'-0"	53'-6"	172 SF	1,548 CF
225	OFFICE	B	F	J	Q	9'-0"	45'-8"	120 SF	1,165 CF
226	OFFICE	B	F	J	Q	9'-0"	45'-8"	130 SF	1,169 CF
227	WAREHOUSE	A	E	K	P	VARIES	473'-2"	12,466 SF	270,462 CF
228	MAINTENANCE SHOP	A	E	K	P	VARIES	157'-11"	1,454 SF	28,135 CF
229	TESTING	G	F	L	Q	9'-0"	147'-4"	1,075 SF	9,677 CF
230	DISPATCH	B	F	K	Q	9'-0"	41'-5"	102 SF	914 CF
231	MEN'S LOCKERS / R.R.	B	F	L	R	9'-0"	102'-10"	657 SF	5,911 CF
232	WOMENS LOCKERS / R.R.	B	F	L	R	9'-0"	50'-11"	415 SF	3,731 CF
233	JANITOR	A	F	L	R	8'-0"	45'-7"	93 SF	633 CF
234	COMPRESSOR ROOM	A	E	K	P	VARIES	136'-10"	945 SF	9,452 CF
235	MEZZANINE						76'-9"	368 SF	2,825 CF
300	PERSONNEL SHACK	A	E	J	S	VARIES	24'-0"	36 SF	308 CF

ROOM FINISH KEY

ROOM NUMBER
101 ROOM NAME
F B W C CEILING HEIGHT
CEILING
WALL
BASE
FLOOR
WHERE FINISHES ARE UNIFORM FOR FLOOR, WALL, BASE, AND CEILING RESPECTIVELY

SPECIAL FINISH KEYS
(F) FLOOR
W WALL OR BASE
A "-" DASH IN PLACE OF LETTER INDICATES MATRIX FINISHES IN THE SAME ROOM. REFER SPECIAL FINISH KEYS FOR THESE LOCATIONS. ANY "INDICATED NONE" SITE ALSO REFLECTED CEILING PLAN.

FLOOR
A SEALED CONCRETE
B STAINED AND SEALED CONCRETE
C RESERVED
D RESERVED

BASE
E NO BASE - WALL FINISH EXTENDS TO FLOOR
F 4" RESILIANT COVE BASE
G RESERVED
H RESERVED

WALLS
J PAINTED ACCORDING TO SUBSTRATE
K METAL LINER PANELS TO 8'-0", EXPOSED INSULATION AND P.E.M.B. SYSTEMS ABOVE
L FIBERGLASS REINFORCED PANELS (FRP) TO CEILING
M RESERVED
N RESERVED

CEILINGS
P EXPOSED INSULATION AND P.E.M.B. SYSTEMS
Q 2'x2' SUSPENDED CEILING GRID AND ACOUSTICAL TILES
R 2'x2' SUSPENDED CEILING GRID WITH MOISTURE RESISTANT TILES
S PAINTED ACCORDING TO SUBSTRATE

JOHNSON & PACE INCORPORATED
ENGINEERING • ARCHITECTURE • SURVEYING
1021 NW I-20, SUITE 100, ABILENE, TEXAS 79601 (325) 672-3300
FIRM ID NO. 2 FIRM ID NO. 10193900
website www.johnsonpace.com

SOUTHERN PRECISION SANDS
NEW COATING FACILITY
VOCA, TEXAS

REVISIONS			
NO.	DESCRIPTION	BY	DATE
1	Revision 1 Building Modifications		2/4/2011

SCHEDULES AND DETAILS

ISSUED FOR BID

JOB NO. 2295-11-000-02		DATE:	
DRAWN BY: JCT	CHECKED BY:	APPROVED BY:	SCALE: As indicated
SHEET NO.: A4.0			REVISION NO. 1

Copyright © 2010, Johnson & Pace Incorporated

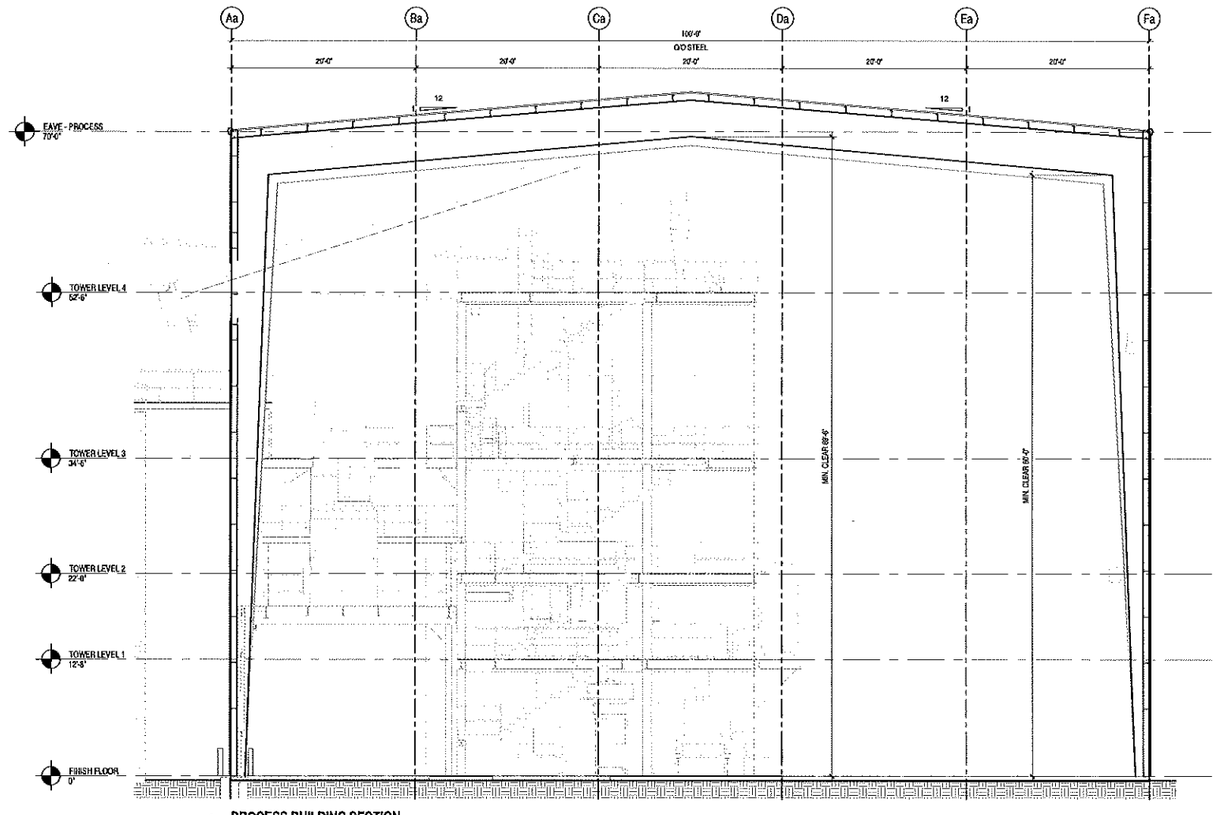

1 PROCESS BUILDING SECTION
SCALE: 1/8" = 1'-0"

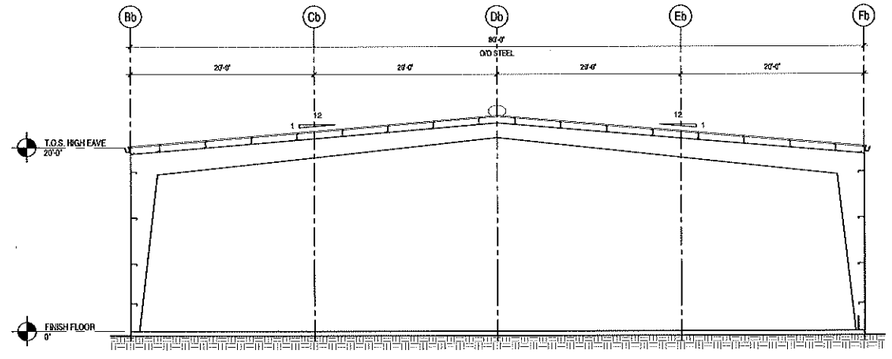

2 WAREHOUSE SECTION
SCALE: 1/8" = 1'-0"

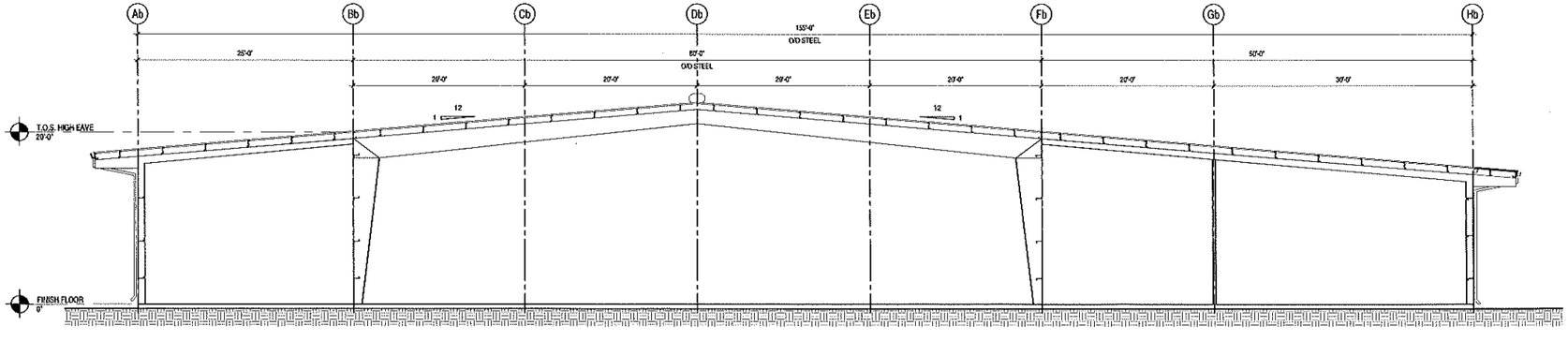

3 WAREHOUSE SECTION
SCALE: 1/8" = 1'-0"

GENERAL NOTES

1. INSULATION - IN P.E.M.B. SYSTEM
   a. ROOF SHALL HAVE NOT LESS THAN R-28 WITH AN EXPOSED, FACED, & BANDED SYSTEM
   b. WALLS SHALL HAVE NOT LESS THAN R-19 WITH AN EXPOSED, FACED, & BANDED "ENERGY SAVER" SYSTEM
2. P.E.M.B. - EXTERIOR SKIN
   a. ROOF PANELS SHALL BE "R-PANEL", 26-gauge MINIMUM WITH "STANGUARD" FACTORY FINISH
   b. WALL PANELS SHALL BE "R" TYPE PROFILE, 26-gauge MINIMUM WITH FACTORY COLORED FINISH (70% KYNAR MINIMUM).
3. P.E.M.B. SUPPLIER SHALL PROVIDE GUTTERS AND DOWNSPOUTS AS INDICATED ON DRAWINGS. FINISH TO MATCH WALL PANELS.
4. P.E.M.B. SUPPLIER SHALL PROVIDE ALL FLASHINGS AND TRIM COMPATABLE WITH THE ROOF AND WALL SYSTEMS FOR A COMPLETE AND WATER-TIGHT INSTALLATION
5. DIMENSIONS SHOWN ARE FROM BUILDING LINE, TO FACE OF STUD WALL FRAME, TO EDGES OF ROUGH OPENINGS, TO CENTERLINE OF FIXTURES UNLESS INDICATED OTHERWISE

JOHNSON & PACE INCORPORATED
ENGINEERING • ARCHITECTURE • SURVEYING
1221 NW COOP BLVD., SUITE 101
BEND, OREGON 97701-7979
PHONE: (541) 385-1007
FAX: (541) 385-1008
website: www.johnsonpace.com

SOUTHERN PRECISION SANDS
NEW COATING FACILITY
VOCA, TEXAS

REVISIONS

NO.	DESCRIPTION	BY	DATE

BUILDING SECTIONS

ISSUED FOR BID

JOB NO: 2509-11-009-02	ISSUE DATE:
DRAWN BY: JDT	CHECKED BY:
APPROVED BY:	SCALE: 1/8" = 1'-0"
SHEET NO: A5.1	REVISION NO:

THIS DRAWING AND SUCH SPECIFICATIONS, NOTES AND SUCH DOCUMENTS AS SUCH DOCUMENTS ON ELECTRONIC MEDIA, WERE PREPARED BY JOHNSON AND PACE INCORPORATED (JP) AS INSTRUMENTS OF SERVICE AND SHALL REMAIN THE PROPERTY OF JP. THE INFORMATION SHOWN HEREON SHALL BE USED ONLY BY THE OWNER FOR THE PURPOSE OF REPAIRING, CONSTRUCTING OR INSTALLING THE WORK SHOWN HEREON AT THE DESIGNATED LOCATION ON THE SPECIFIED SITE. ANY UNAUTHORIZED USE OF SUCH DOCUMENTS, INCLUDING WITHOUT LIMITATION REPRODUCTION OR ALTERATION, IS STRICTLY PROHIBITED AND SHALL CAUSE THE WAIVER OF ANY EXPRESSED WARRANTIES AND ALL OTHER WARRANTIES BY JOHNSON AND PACE INCORPORATED.
Copyright © 2010, Johnson & Pace Incorporated

Filename: C:\Users\jdt\Documents\2509-11-009-02 Bend_Jp Plot.dwg
Plotted: 3/16/2011 11:57:08 AM

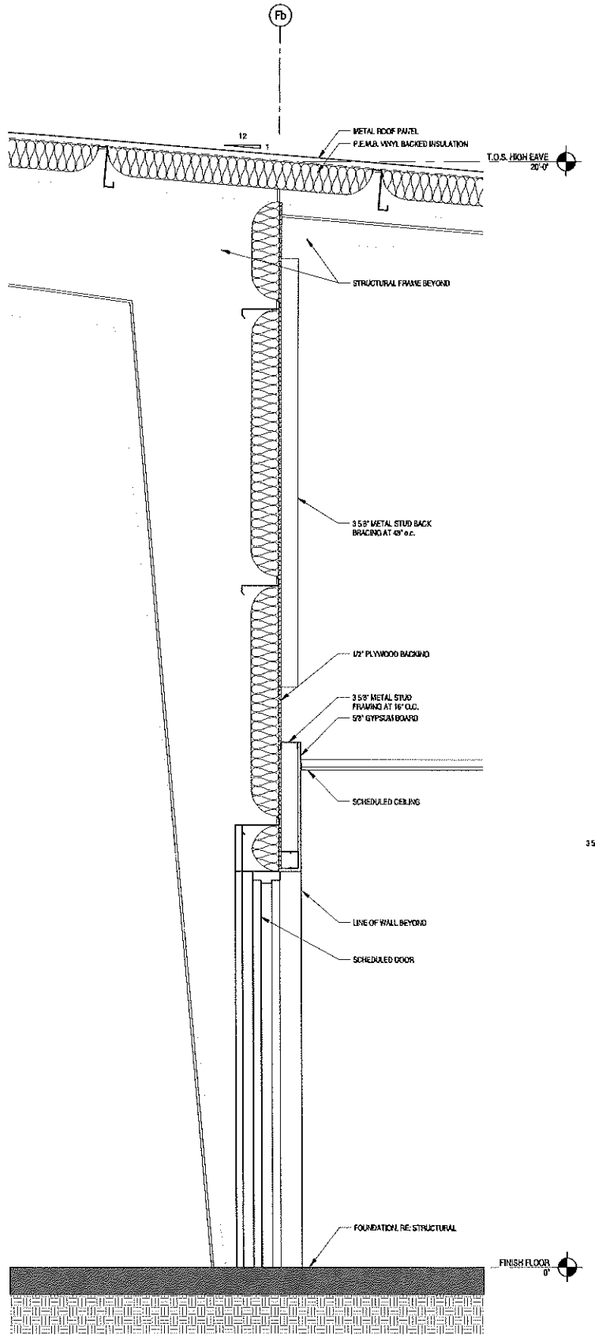

1 WAREHOUSE/OFFICE WALL SECTION

SCALE: 3/4" = 1'-0"

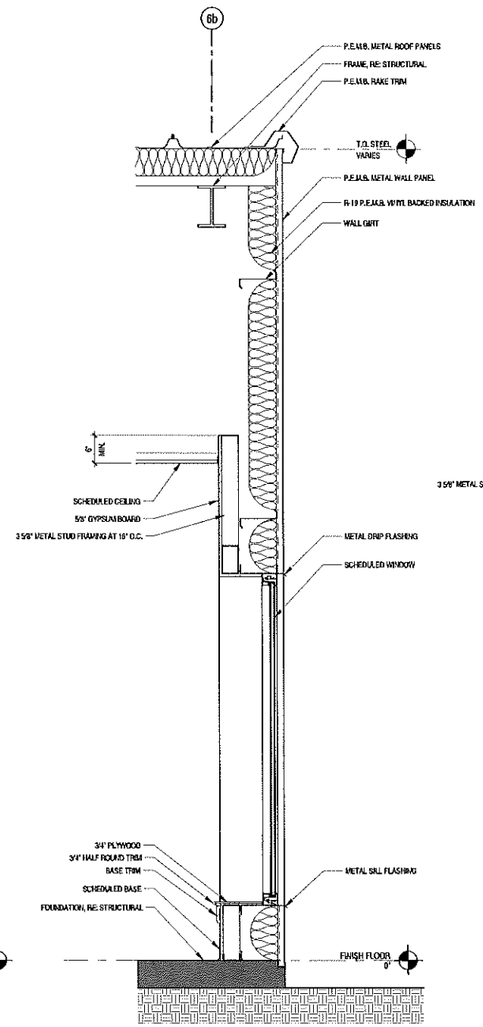

2 SIDEWALL SECTION AT OFFICE

SCALE: 3/4" = 1'-0"

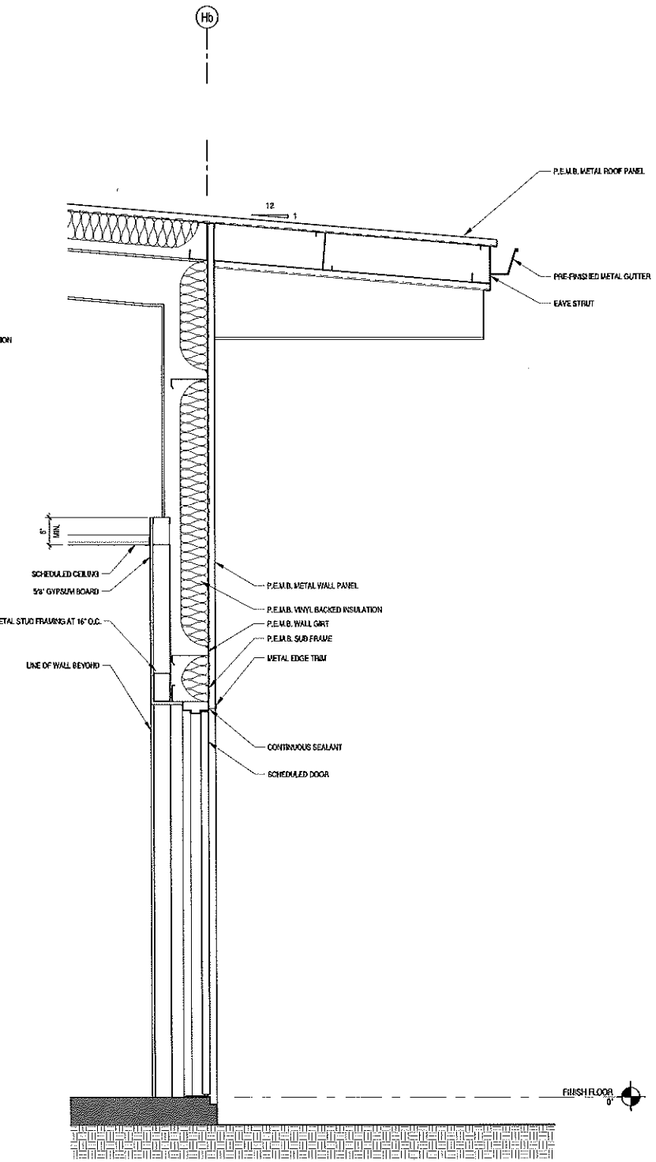

3 WALL SECTION AT OFFICE ENTRANCE

SCALE: 3/4" = 1'-0"

Filename: C:\Users\jim\Documents\2509-11-005-02 AB_JohnH.rvt Plotted: 2/4/2011 11:07:09 AM

Copyright © 2010, Johnson & Pace Incorporated

THIS DRAWING AND RELATED SPECIFICATIONS, INCLUDING AS DOCUMENTS ON ELECTRONIC MEDIA, WERE PREPARED BY JOHNSON AND PACE INCORPORATED (JP) AS INSTRUMENTS OF SERVICE AND SHALL REMAIN THE PROPERTY OF JP. THE INFORMATION SHOWN HEREIN SHALL BE USED ONLY BY THE CLIENT TO WHOM STAMPED AND SEALED FOR THE PURPOSE OF OBTAINING CONSTRUCTION OR PERMANENT THE WORK SHOWN HEREON AT THE DESIGNATED LOCATION ON THE SPECIFIED SITE. ANY UNAUTHORIZED USE OF THESE DOCUMENTS, INCLUDING WITHOUT LIMITATION REPRODUCTION OR ALTERATION, IS STRICTLY PROHIBITED AND SHALL CLAIM THE PRICE OF ANY EXPRESSED WARRANTIES AND ALL OTHER ANY LIABILITIES WHICH MAY ARISE FROM THE CONTRACTOR'S USE OR REUSE OF SUCH UNAUTHORIZED DRAWINGS.

JOHNSON & PACE INCORPORATED
ENGINEERING • ARCHITECTURE • SURVEYING
1201 NW LOOP 281, SUITE 100,
LONGVIEW, TEXAS 75604
(903)757-0001 FAX (903)753-9663
WEB SITE: www.johnsonpace.com

SOUTHERN PRECISION SANDS
NEW COATING FACILITY
VOCA, TEXAS

NO.	DESCRIPTION	BY	DATE

REVISIONS

WALL SECTIONS

ISSUED FOR BID

JOB NO: 2509-11-005-02	ISSUE DATE:
DRAWN BY: JJT	CHECKED BY:
APPROVED BY:	SCALE: 3/4" = 1'-0"
SHEET NO: A6.1	REVISION NO:

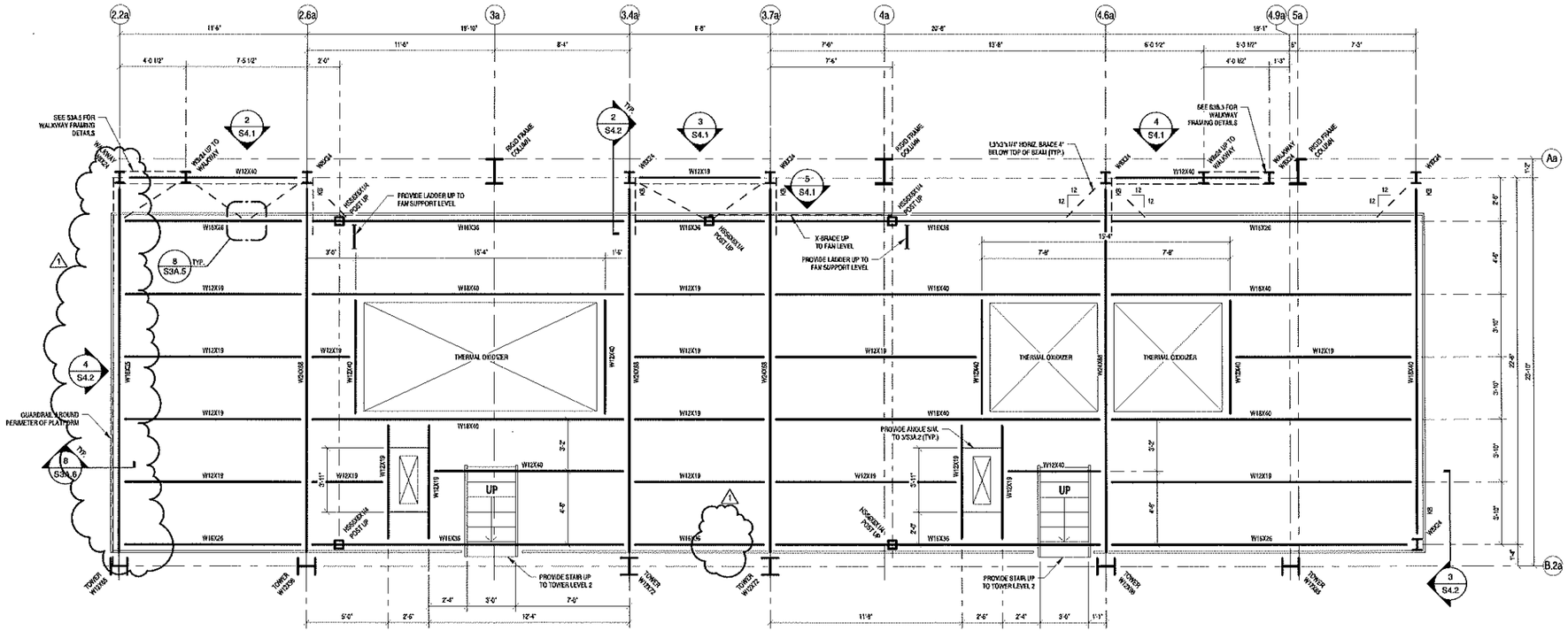

1 OXIDIZER SUPPORT LEVEL (TOP OF BEAM = +18'-5 1/2")

SCALE: 1/4" = 1'-0"

NOTES:
1. SEE 3.S3A.1 FOR TYPICAL FLOOR CONSTRUCTION AND CONNECTION SCHEDULE. ALL FLOOR AREA NOT COVERED BY EQUIPMENT TO BE DECKED WITH 1/2" CHECKERED PLATE.
2. DESIGN LIVE FLOOR LOAD IS 100 PSF.

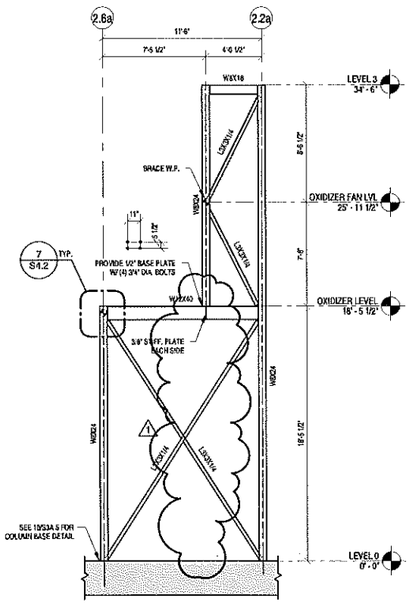

2 OXIDIZER SUPPORT BRACING ELEVATION

SCALE: 3/16" = 1'-0"

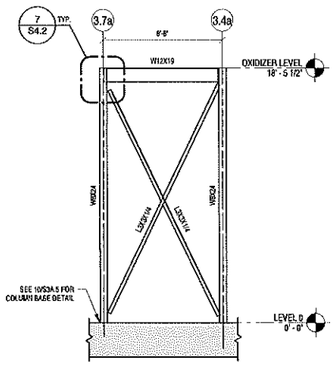

3 OXIDIZER SUPPORT BRACING ELEVATION

SCALE: 3/16" = 1'-0"

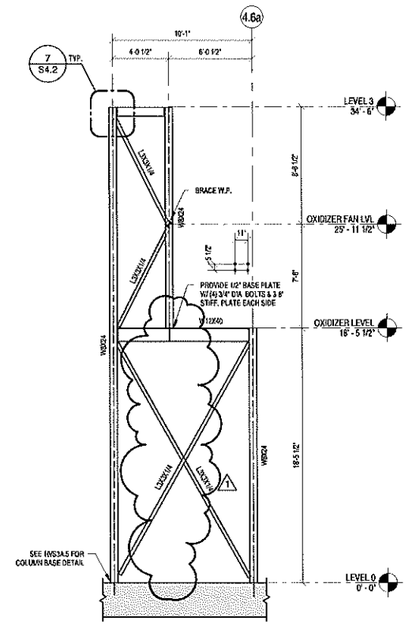

4 OXIDIZER SUPPORT BRACING ELEVATION

SCALE: 3/16" = 1'-0"

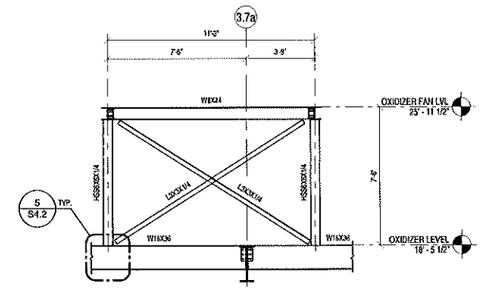

5 OXIDIZER SUPPORT BRACING ELEVATION

SCALE: 1/4" = 1'-0"

THIS DRAWING AND RELATED SPECIFICATIONS, INCLUDING ALL DOCUMENTS IN ELECTRONIC MEDIA, WERE PREPARED BY JOHNSON & PACE, INCORPORATED (J.P.I.) FOR USE ON THIS PROJECT ONLY AND NOT FOR OTHER PROJECTS OR FOR THE BENEFIT OF ANY OTHER PERSONS OR ENTITIES. ANY UNAUTHORIZED USE OF THESE DOCUMENTS, INCLUDING WITHOUT LIMITATION REPRODUCTION OR ALTERATION, IS STRICTLY PROHIBITED AND SHALL CAUSE THE WAIVER OF ANY EXPRESSED WARRANTIES AND ALSO EXPOSE ANY LIABILITIES WHICH MAY ARISE FROM THE CONSTRUCTION USE OR REUSE OF SUCH UNAUTHORIZED USE OR CHANGES.

Filename: C:\Users\jacobs\Desktop\Temp\SOUTHERN PRECISION SANDS STRUCT.DWG_Original.dwg

Plotted: 2/23/2011 4:53:17 PM

Copyright © 2010, Johnson & Pace Incorporated

JOHNSON & PACE INCORPORATED
ENGINEERING • ARCHITECTURE • SURVEYING
1221 AVE. LOOP 251, SUITE 101
LUBBOCK, TEXAS 79423-1011
(806) 762-0102 FAX (806) 762-0402
REGISTRATION NO. F-2439
website: www.johnsonpace.com

This document is released for the purpose of interim review under the authority of Ronald Lewis, P.E. of Johnson & Pace, P.E. It is not to be used for construction, or permit purposes.

SOUTHERN PRECISION SANDS NEW COATING FACILITY VOCA, TEXAS

REVISIONS

NO.	DESCRIPTION	BY	DATE
1	REVISED AS NOTED	SAW	2-4-11

THERMAL OXIDIZER SUPPORT FRAMING PLAN

ISSUED FOR BID

JOB NO. 2009-10-005-02		DATE 07/23/2011	
DRAWN BY SAW	DESIGNED BY JD	APPROVED BY RL	SCALE As Indicated
SHEET NO. S4.1			REVISION 1

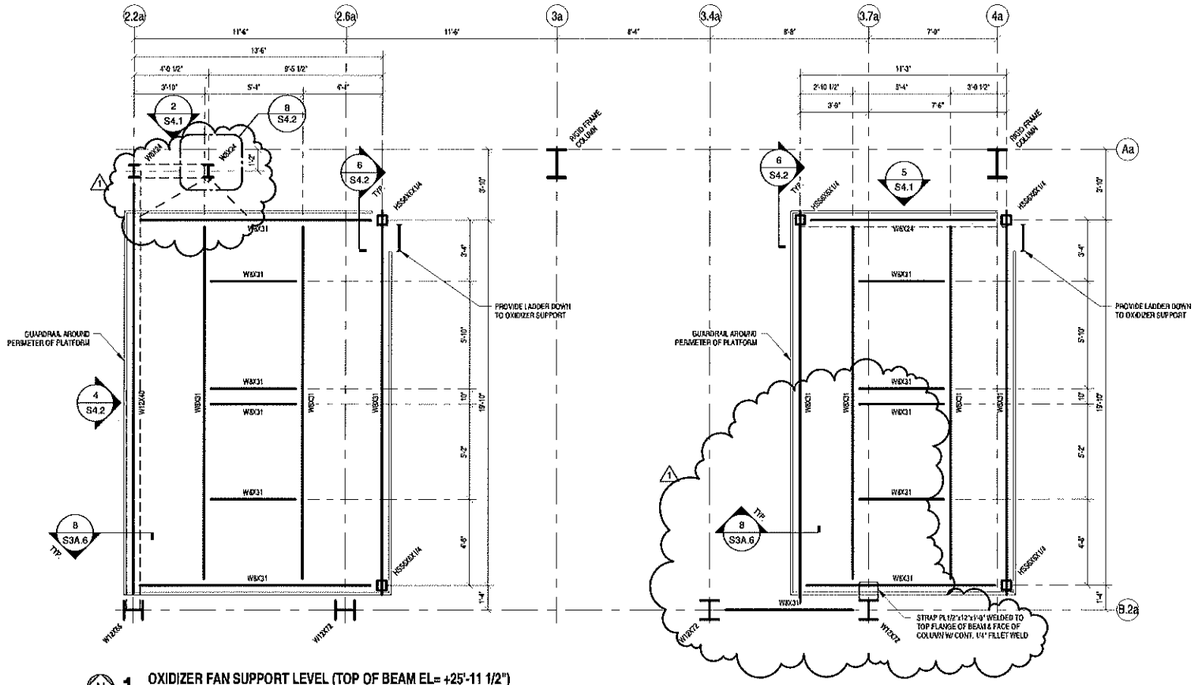

1 OXIDIZER FAN SUPPORT LEVEL (TOP OF BEAM EL= +25'-11 1/2")
SCALE: 1/4" = 1'-0"

NOTES:
1. SEE 3.53A.1 FOR TYPICAL FLOOR CONSTRUCTION AND CONNECTION SCHEDULE. ALL FLOOR AREA NOT COVERED BY EQUIPMENT TO BE DECKED WITH 1/2" CHECKERED PLATE.
2. DESIGN LIVE FLOOR LOAD IS 100 PSF.

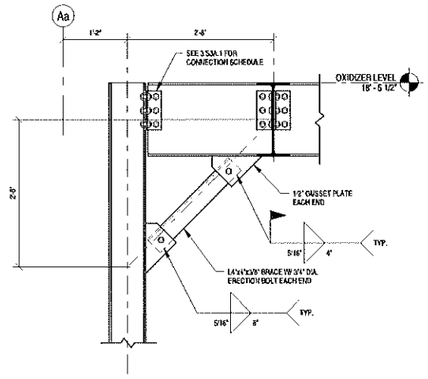

2 KNEE BRACE DETAIL
SCALE: 3/4" = 1'-0"

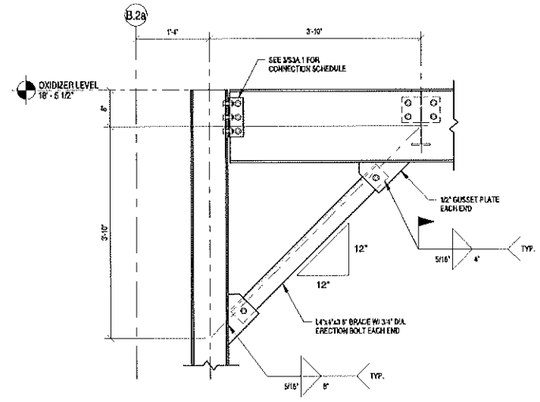

3 KNEE BRACE DETAIL
SCALE: 3/4" = 1'-0"

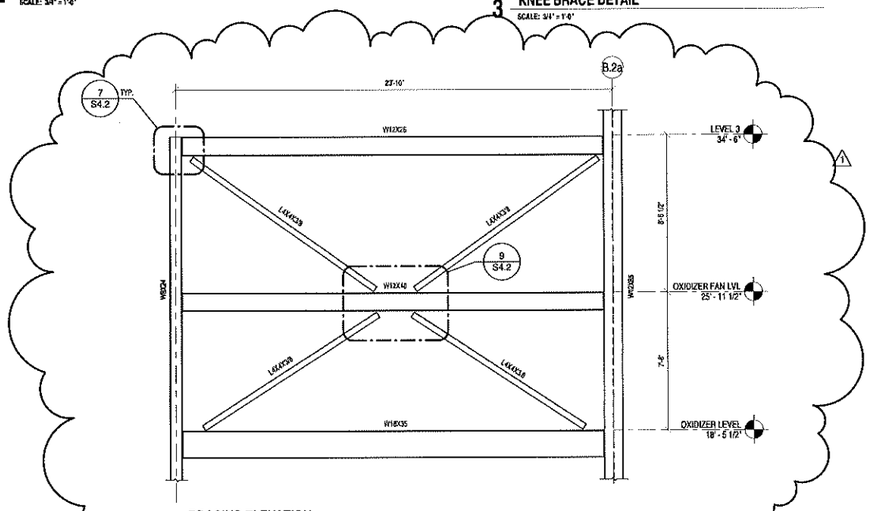

4 BRACING ELEVATION
SCALE: 1/4" = 1'-0"

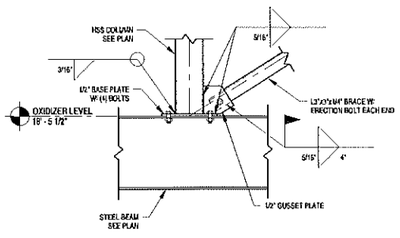

5 BRACING DETAIL
SCALE: 3/4" = 1'-0"

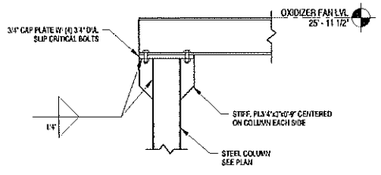

6 FRAMING DETAIL
SCALE: 3/4" = 1'-0"

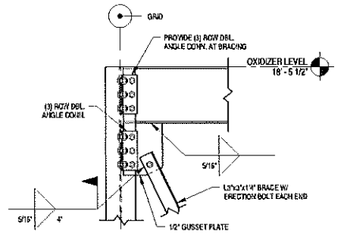

7 BRACING DETAIL
SCALE: 3/4" = 1'-0"

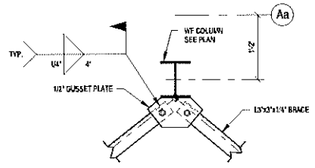

8 BRACING DETAIL
SCALE: 3/4" = 1'-0"

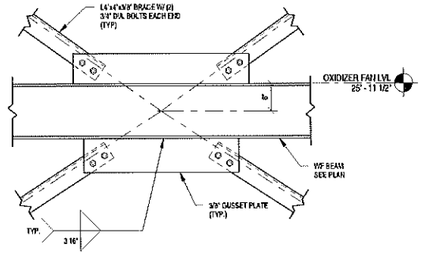

9 BRACING DETAIL
SCALE: 3/4" = 1'-0"

THIS DRAWING AND ANY RELATED SPECIFICATIONS, DRAWINGS AND DOCUMENTS IS RESTRICTED, AND IS THE PROPERTY OF JOHNSON & PACE, INC. THE INFORMATION CONTAINED HEREIN, IN WHOLE OR IN PART, IS TO BE CONSIDERED AS AN INSTRUMENT OF SERVICE FOR THE PURPOSE OF DESIGN, BIDDING OR CONSTRUCTION OF PROJECTS OWNED BY JOHNSON & PACE, INC. AND IS NOT TO BE USED FOR ANY OTHER PURPOSE. REPRODUCTION OR PUBLICATION OF THIS DRAWING, IN WHOLE OR IN PART, WITHOUT WRITTEN PERMISSION OF JOHNSON & PACE, INC. IS PROHIBITED. ANY OTHER USE OR REUSE BY OTHERS IS AT THEIR SOLE RISK AND WITHOUT LIABILITY OR LEGAL EXPOSURE TO JOHNSON & PACE, INC. ALL REPRODUCTIONS MUST BEAR THE ORIGINAL JOHNSON & PACE, INC. COPYRIGHT NOTICE.

Copyright © 2010, Johnson & Pace Incorporated

Filename: C:\Users\saw\Desktop\2250-10-006-02 STRUCTURAL_Sandhills.rvt
Plotted: 2/2/2011 4:52:19 PM

JOHNSON & PACE INCORPORATED
ENGINEERING - ARCHITECTURE - SURVEYING
1201 NW LOOP 281, SUITE 100
LONGVIEW, TEXAS 75604
(903) 663-7500 FAX: (903) 663-7503
WEBSITE: www.johnsonpace.com

This document is released for the purpose of interim review under the authority of Richard L. Lewis, P.E. # 77870 on 01/05/2011. It is not to be used for construction, or permit purposes.

SOUTHERN PRECISION SANDS NEW COATING FACILITY VOCA, TEXAS

REVISIONS

NO.	DESCRIPTION	BY	DATE
1	REVISED AS NOTED	SAW	2-4-11

THERMAL OXIDIZER SUPPORT FRAMING PLAN

ISSUED FOR BID

JOB NO: 2250-10-006-02		ISSUE DATE: 01/05/2011	
DRAWN BY: SAW	DESIGNED BY: JD	APPROVED BY: RL	SCALE: As indicated
SHEET NO: S4.2			REVISION NO: 1

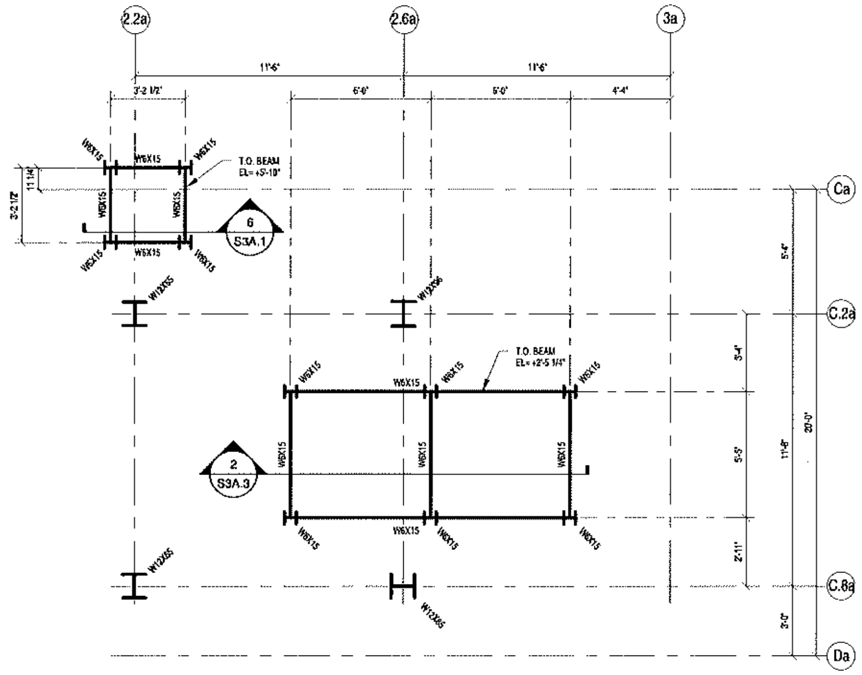

1 LINE 'A' SCREEN SUPPORT FRAMING PLAN
SCALE: 1/4" = 1'-0"

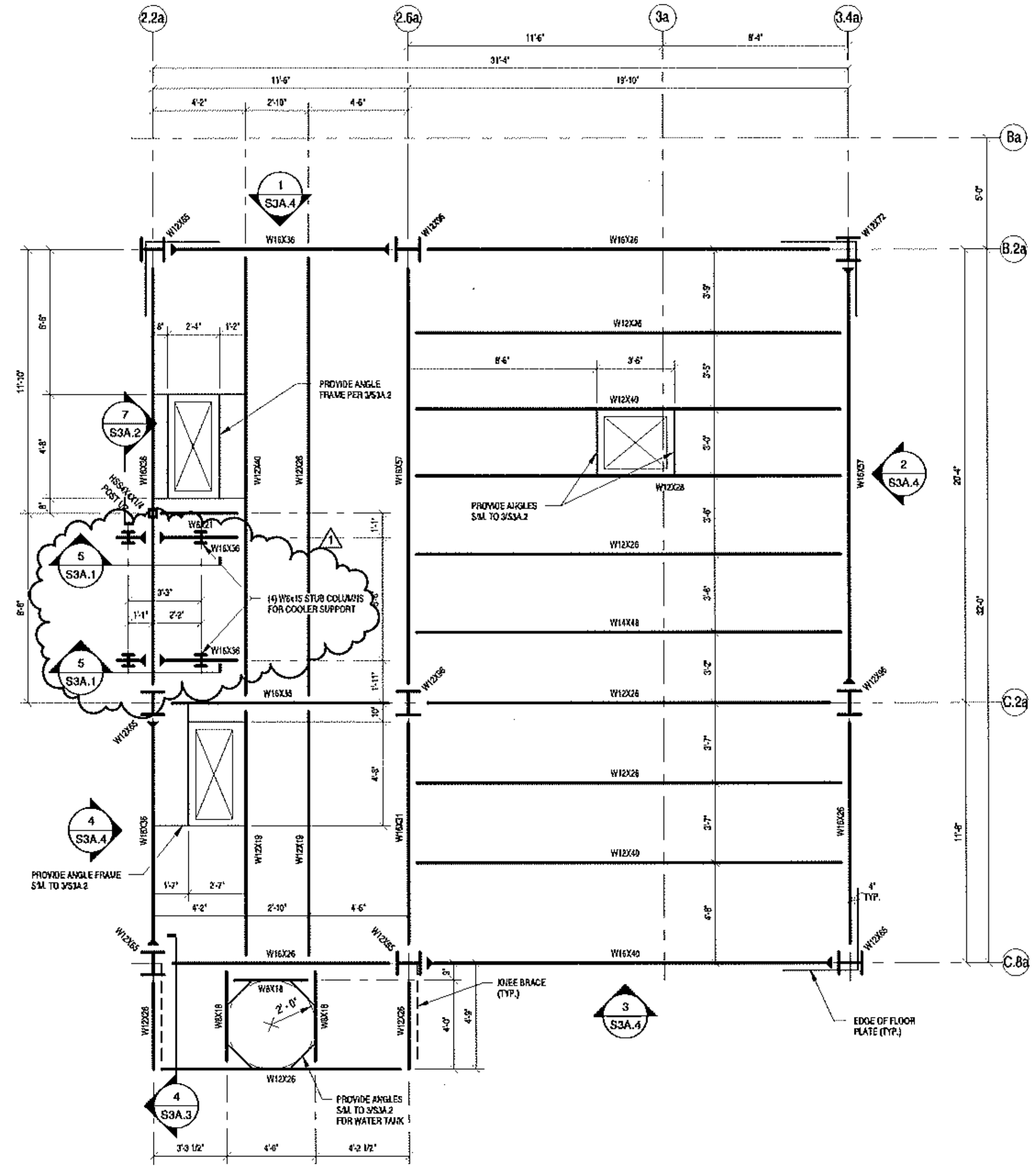

2 LINE 'A' FRAMING PLAN - LEVEL 1 (TOP OF BEAM ELEVATION = +12'-8")
SCALE: 1/4" = 1'-0"

NOTES:

1. SEE 3 S3A.1 FOR TYPICAL FLOOR CONSTRUCTION AND CONNECTION SCHEDULE. ALL FLOOR AREA NOT COVERED BY PROCESSING EQUIPMENT TO BE DECKED W/ 1/2" CHECKERED PLATE.
3. INDICATES MOMENT CONNECTION. SEE DETAILS 4 & 5 ON SHEET S3A.2 FOR MORE INFORMATION.
4. DESIGN FLOOR LIVE LOAD IS 250 PSF.

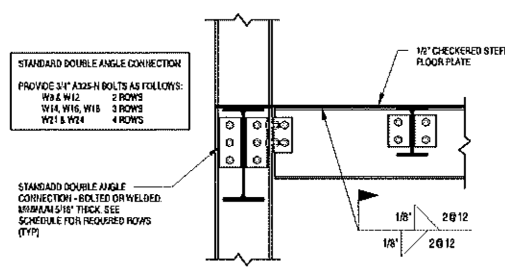

STANDARD DOUBLE ANGLE CONNECTION

PROVIDE 3/4" A325-N BOLTS AS FOLLOWS:
W8 & W12 — 2 ROWS
W14, W16, W18 — 3 ROWS
W21 & W24 — 4 ROWS

3 TYPICAL CONNECTION SCHEDULE
SCALE: 3/4" = 1'-0"

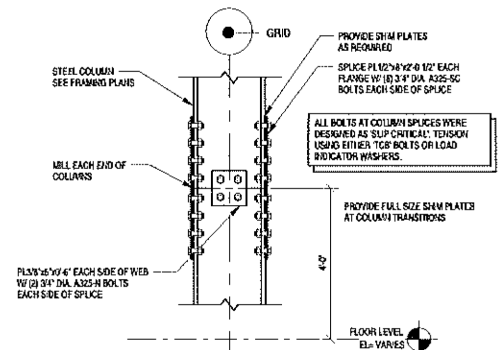

4 TYPICAL COLUMN SPLICE DETAIL
SCALE: 3/4" = 1'-0"

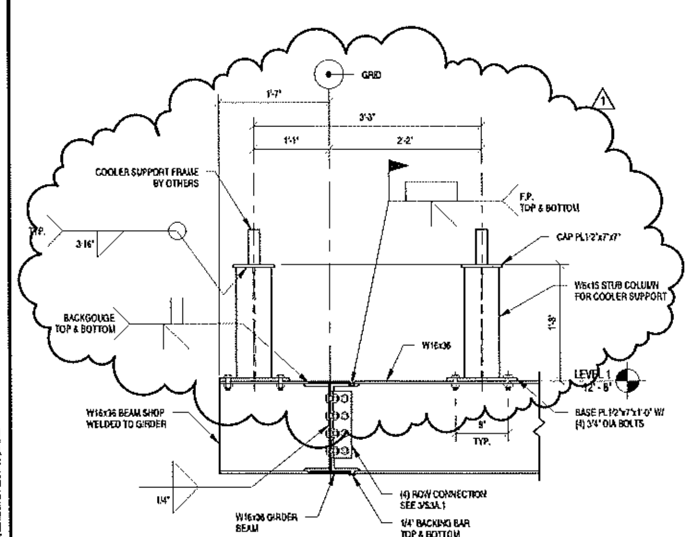

5 FRAMING SECTION
SCALE: 3/4" = 1'-0"

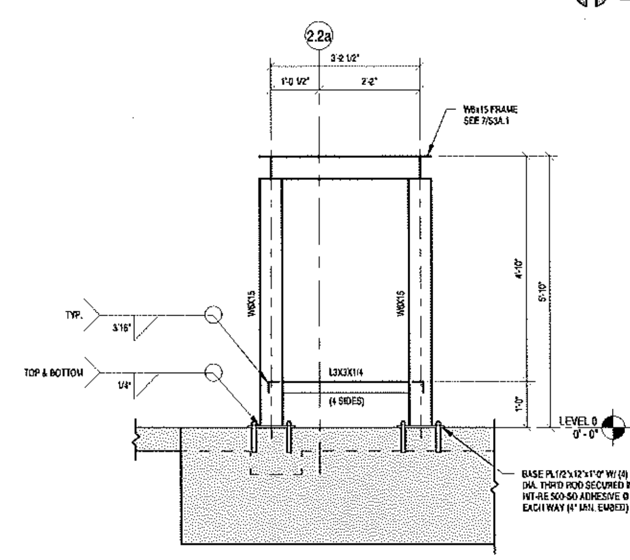

6 KASON SUPPORT DETAIL
SCALE: 1/2" = 1'-0"
DESIGN LOAD - 1250 LBS

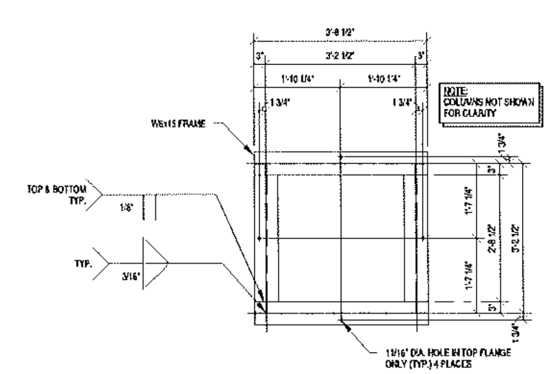

7 KASON SUPPORT FRAME
SCALE: 1/2" = 1'-0"

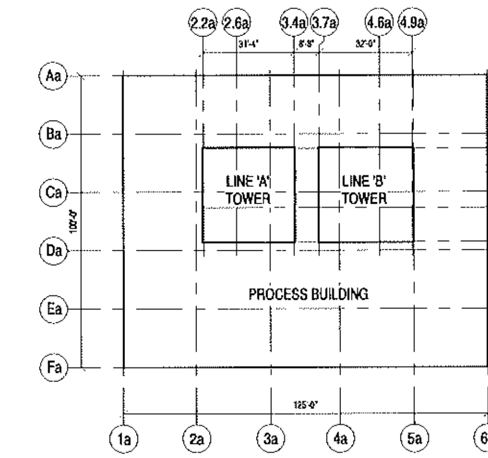

8 OVERALL PROCESS BUILDING FLOOR PLAN
SCALE: 1/32" = 1'-0"

GENERAL NOTES

GENERAL NOTES

STRUCTURAL STEEL: ALL FABRICATION AND ERECTION SHALL CONFORM TO THE LATEST EDITION OF ANSI/AISC 360 "SPECIFICATION FOR STRUCTURAL STEEL BUILDINGS", AISC 303 "CODE OF STANDARD PRACTICE FOR STEEL BUILDINGS AND BRIDGES" AND AWS D1.1 "STRUCTURAL WELDING CODE". ROLLED WIDE FLANGE SECTIONS TO BE ASTM A992. ALL OTHER ROLLED SECTIONS TO BE ASTM-A36 OR ASTM-A572, GR. 50. COLUMN BASE PLATES TO BE ASTM A572, GR. 50. ALL OTHER PLATE MATERIAL TO BE S36. STEEL TUBES ASTM A500, GRADE B, PIPE COLUMNS ASTM A53, GRADE B OR ASTM A500, GRADE B, WELDING ELECTRODES E70XX. CHECKERED PLATE TO BE ASTM A786. SHOP CONNECTIONS BOLTED OR WELDED. FIELD CONNECTIONS BOLTED WITH A325-N BOLTS, INSTALLED BY SNUG-TIGHT METHOD, UNLESS SLIP CRITICAL BOLTS (SC) OR WELDED CONNECTIONS ARE NOTED ON DRAWINGS. MINIMUM FILLET WELD SIZE IS TO BE 3/16" UNLESS NOTED OTHERWISE.

ANCHOR BOLTS ASTM F1554, GRADE 36. PROVIDE HEX HEADED ANCHOR BOLTS UNLESS SHOWN OTHERWISE IN DETAILS. IN LIEU OF HEADED BOLTS CONTRACTOR MAY USE ROD THREADED ON EACH END, OR ALL THREAD, AND NUTS WITH MECHANICALLY DEFORMED THREADS TO LOCK THE NUT ONTO THE BOLT SHAFT. THREADED ROD TO BE ASTM A307.

CONTRACTOR IS RESPONSIBLE TO COMPLY WITH ALL OSHA REGULATIONS FOR STRUCTURAL STEEL ERECTION, WHETHER OR NOT SPECIFIC OSHA DETAILS ARE SHOWN ON THESE DOCUMENTS. THE CONTRACTOR IS RESPONSIBLE FOR ALL MEANS AND METHODS OF CONSTRUCTION AND FOR COMPLYING WITH ALL GOVERNMENTAL REGULATIONS. THE DESIGN PROFESSIONAL DOES NOT ASSUME ANY RESPONSIBILITY FOR JOB SITE PROCEDURES AND SAFETY.

ALL STEEL SHALL BE CLEANED OF RUST, LOOSE MILL SCALE AND OTHER FOREIGN MATERIALS, AND RECEIVE ONE COAT OF APPROVED GRAY PRIMER PAINT. STEEL EXPOSED TO THE ELEMENTS SHALL BE PAINTED AS REQUIRED BY SPECIFICATIONS, UNLESS OTHERWISE NOTED ON THE DRAWINGS TO BE GALVANIZED, ASTM A525. DO NOT PAINT AROUND SC BOLTS AT COLUMN SPLICE CONNECTIONS.

GUYS AND OTHER BRACING REQUIRED TO PROVIDE LATERAL STABILITY TO THE BUILDING SHALL BE ADEQUATELY SIZED AND ANCHORED. THIS BRACING SHALL REMAIN UNTIL THE PERMANENT BRACING SYSTEM IS IN PLACE.

THE FABRICATOR SHALL FURNISH CHECKED SHOP AND ERECTION DRAWINGS. AND OBTAIN APPROVAL PRIOR TO FABRICATING ANY STRUCTURAL STEEL.

SPECIAL INSPECTION: ALL TESTING ARE TO BE INCLUDED IN THE CONTRACTORS SCOPE OF WORK UNLESS SPECIFIED AS OWNER SUPPLIED IN PROJECT SPECIFICATIONS.

STRUCTURAL STEEL FRAME: (IBC 1704.3, TABLE 1704.3)
A. SUBMITTAL OF MATERIAL DATA VERIFYING STRENGTH OF HIGH STRENGTH BOLTS, NUTS AND WASHERS.

B. PROVIDE VISUAL INSPECTION OF HIGH STRENGTH BEARING TYPE BOLTED TIGHTENING AT COMPLETION OF STRUCTURAL STEEL ERECTION.

C. PROVIDE INSPECTION OF HIGH STRENGTH SLIP-CRITICAL TYPE BOLTED TIGHTENING AT COMPLETION OF STRUCTURAL STEEL ERECTION. INSPECTION TO INCLUDE VISUAL INSPECTION VERIFYING PRE-TENSIONING OF BOLTS BY COMPRESSIBLE-WASHER-TYPE DIRECT TENSION INDICATORS (ASTM F959) OR TWIST-OFF TENSION CONTROL BOLTS AS MANUFACTURED BY LEJEUNE BOLT COMPANY OR EQUAL.

D. PROVIDE CONTINUOUS WELDING INSPECTION FOR:
(a) COMPLETE AND PARTIAL PENETRATION GROOVE WELDS.
(b) MULTI-PASS FILLET WELDS.
(c) SINGLE PASS FILLET WELDS GREATER THAN 5/16".

** SHOP WELDING IS TO BE INSPECTED BY THE FABRICATOR ERECTOR'S OWN QUALITY CONTROL TESTING AND INSPECTION, THE OWNER'S STEEL TESTING AGENCY MAY PERFORM SOME ADDITIONAL SHOP INSPECTION AND WILL PERFORM FIELD INSPECTION AND TESTING. THE CONTRACTOR IS TO REIMBURSE THE OWNER FOR ALL FAILED INSPECTIONS AND TESTS.

E. PROVIDE VISUAL INSPECTION OF ALL FIELD WELDING AT COMPLETION OF STRUCTURAL STEEL ERECTION

F. APART FROM VISUAL INSPECTION AND REVIEW OF FABRICATION AND ERECTION REPORTS OF THE FABRICATOR ERECTOR'S OWN QUALITY CONTROL TESTING AND INSPECTION, THE CONTRACTOR'S STEEL TESTING AGENCY SHALL PERFORM THE FOLLOWING INDICATED SHOP AND FIELD INSPECTION AND TESTING. THE STEEL TESTING AGENCY SHALL BE AWS CERTIFIED BY LOCAL BUILDING AUTHORITY AND SHALL PROVIDE REGISTERED INSPECTORS FOR CONTINUOUS INSPECTION OF ALL STEEL FABRICATION AND ERECTION. STRUCTURAL WELDING, HIGH STRENGTH BOLTING, ETC. SHOP AND FIELD TESTING OF WELDS AND BOLTS SHALL BE AS FOLLOWS:

(a) ULTRASONIC TESTING IS REQUIRED FOR ALL (100%) COMPLETE PENETRATION WELDS. TEST GROOVE WELDING ON CONTINUITY PLATES BY ULTRASONIC TESTING AFTER BEAM FLANGE WELD CONNECTION. TESTING SHALL BE PERFORMED 24 HOURS OR MORE AFTER COMPLETION. WELD BACKING, REMOVAL AREAS AND FILLET WELDS SHALL BE SUBJECT TO MAGNETIC PARTICLE EXAMINATION.
(b) BASE METAL THICKER THAN 1-1/2", SUBJECTED TO THROUGH THICKNESS WELD SHRINKAGE SHALL BE ULTRASONICALLY TESTED DIRECTLY BEHIND SUCH WELD 48 HOURS OR MORE AFTER COMPLETION OF WELDING.
(c) ALL WELDS SHALL BE VISUALLY INSPECTED AND PERIODICALLY MEASURED (15% MIN.).
(d) CHECK A MINIMUM OF 10% OF FILLET WELDS BY MAGNETIC PARTICLE (ASTM 109 METHOD). CHECK A MINIMUM OF 25% OF CONTINUITY PLATE FILLET WELDS AND BEAM FILLET WELDS BY MAGNETIC PARTICLE.
(e) ULTRASONICALLY TEST FOR LAMINATIONS IN COLUMN FLANGE PLATES AT ALL MOMENT CONNECTIONS AND BASE PLATES WHERE COLUMN FLANGE OR BASE PLATE THICKNESS EXCEEDS 1" MAXIMUM. EVALUATE BY TESTING A MINIMUM ZONE EXTENDING 6" ABOVE AND BELOW THE CENTER LINE OF EACH BEAM FLANGE. ALL TESTING SHALL BE PERFORMED ON THE MATERIAL PRIOR TO FABRICATION, AFTER FABRICATION AND AFTER FINAL WELDING OF THE BEAM.

G. TO ASSURE THE PROPER AMPERAGE AND VOLTAGE OF THE WELDING PROCESS, THE USE OF A HAND HELD CALIBRATED AMP AND VOLT METER SHALL BE USED. THIS EQUIPMENT SHALL BE USED BY THE FABRICATOR, ERECTOR AND THE INSPECTORS. AMPERAGE AND VOLTAGE SHALL BE MEASURED AT THE ARC WITH THIS EQUIPMENT. TRAVEL SPEED AND ELECTRODE STICK OUT SHALL BE VERIFIED TO BE IN COMPLIANCE WITH THE ELECTRODE MANUFACTURER'S RECOMMENDATIONS AND WITH THE APPROVED WELDING PROCEDURE SPECIFICATION.

H. ALL STEEL INSPECTION REPORTS ARE TO BE FORWARDED TO THE ENGINEER IN A TIMELY MANNER. WITHIN ONE WEEK OF THE DATE OF INSPECTION. REPORTS ARE TO INDICATE THAT WORK INSPECTED WAS DONE IN CONFORMANCE TO APPROVED CONSTRUCTION DOCUMENTS. WORK NOT IN CONFORMANCE SHALL BE CLEARLY INDICATED IN REPORT.

JOHNSON & PACE INCORPORATED
ENGINEERING • ARCHITECTURE • SURVEYING
1201 NW LOOP 281, SUITE 100, LONGVIEW, TEXAS 75604

This document is released for the purpose of interim review under the authority of Richard Lewis, P.E. # 73789 on 02-03-11, it is not to be used for construction, or permit purposes.

SOUTHERN PRECISION SANDS
NEW COATING FACILITY
VOCA, TEXAS

REVISIONS			
NO.	DESCRIPTION	BY	DATE
1	REVISED AS NOTED	SAW	2-4-11

LINE 'A' TOWER FRAMING PLANS

ISSUED FOR BID

JOB NO: 2569-10-006-02			ISSUE DATE: 01/26/2011
DRAWN BY: SAW	CHECKED BY: JD	APPROVED BY: RL	SCALE: As indicated
SHEET NO: S3A.1			REVISION NO: 1

THIS DRAWING AND RELATED SPECIFICATIONS, INCLUDING ALL DOCUMENTS ON ELECTRONIC MEDIA, WERE PREPARED BY JOHNSON AND PACE INCORPORATED (JPI) AS INSTRUMENTS OF SERVICE AND SHALL REMAIN THE PROPERTY OF JPI.
Copyright © 2010, Johnson & Pace Incorporated

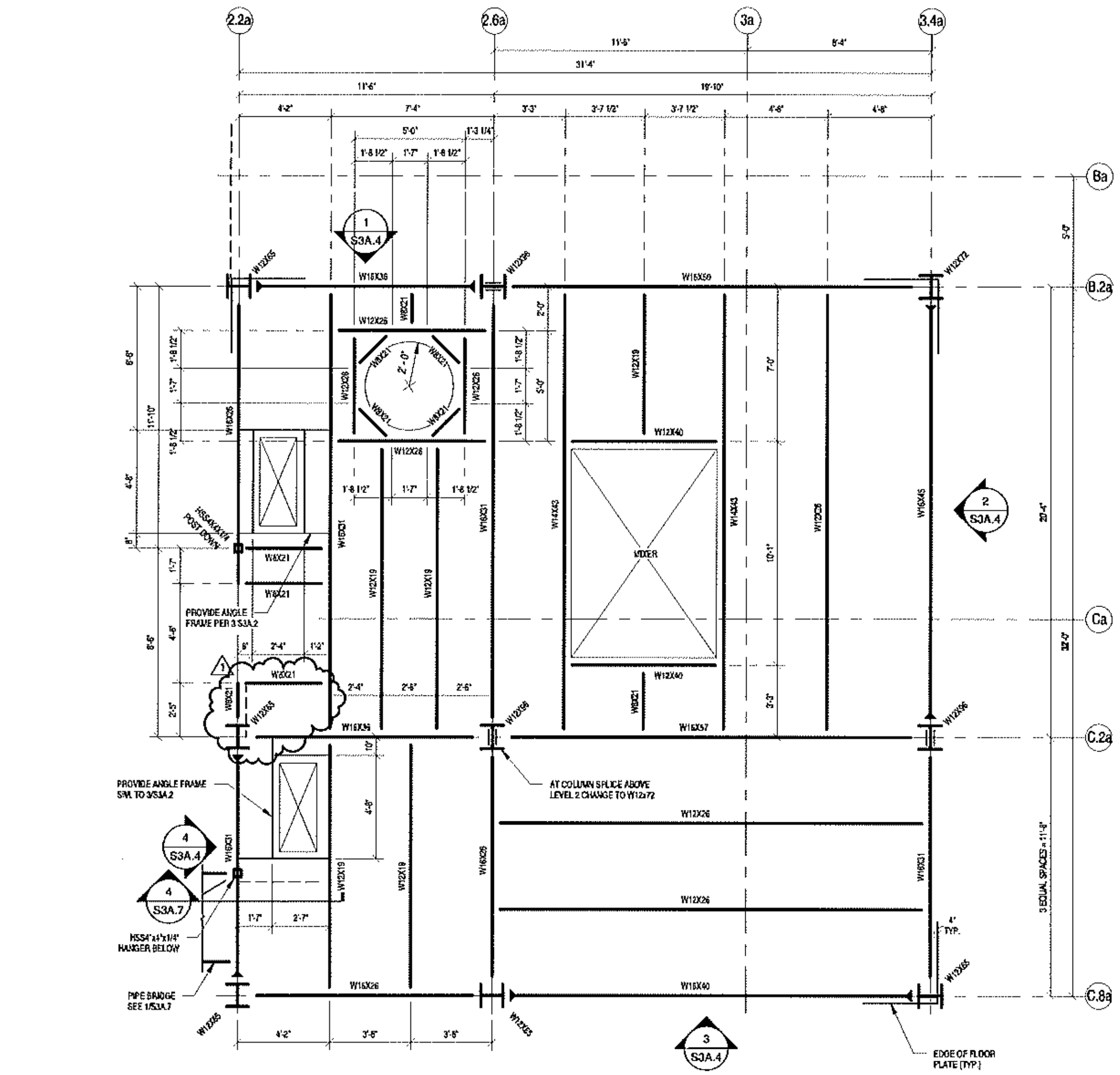

1 LINE 'A' FRAMING PLAN - LEVEL 2 (TOP OF BEAM ELEVATION = +22'-0")

SCALE: 1/4" = 1'-0"

NOTES:

1. SEE 3 S3A.1 FOR TYPICAL FLOOR CONSTRUCTION AND CONNECTION SCHEDULE. ALL FLOOR AREA NOT COVERED BY PROCESSING EQUIPMENT TO BE DECKED W/ 1/2" CHECKERED PLATE.
2. INDICATES COLUMN SPLICE. SEE DETAIL 4 S3A.1 FOR MORE INFORMATION.
3. INDICATES MOMENT CONNECTION. SEE DETAILS 4 & 5 ON SHEET S3A.2 FOR MORE INFORMATION.
4. DESIGN FLOOR LIVE LOAD IS 250 PSF.

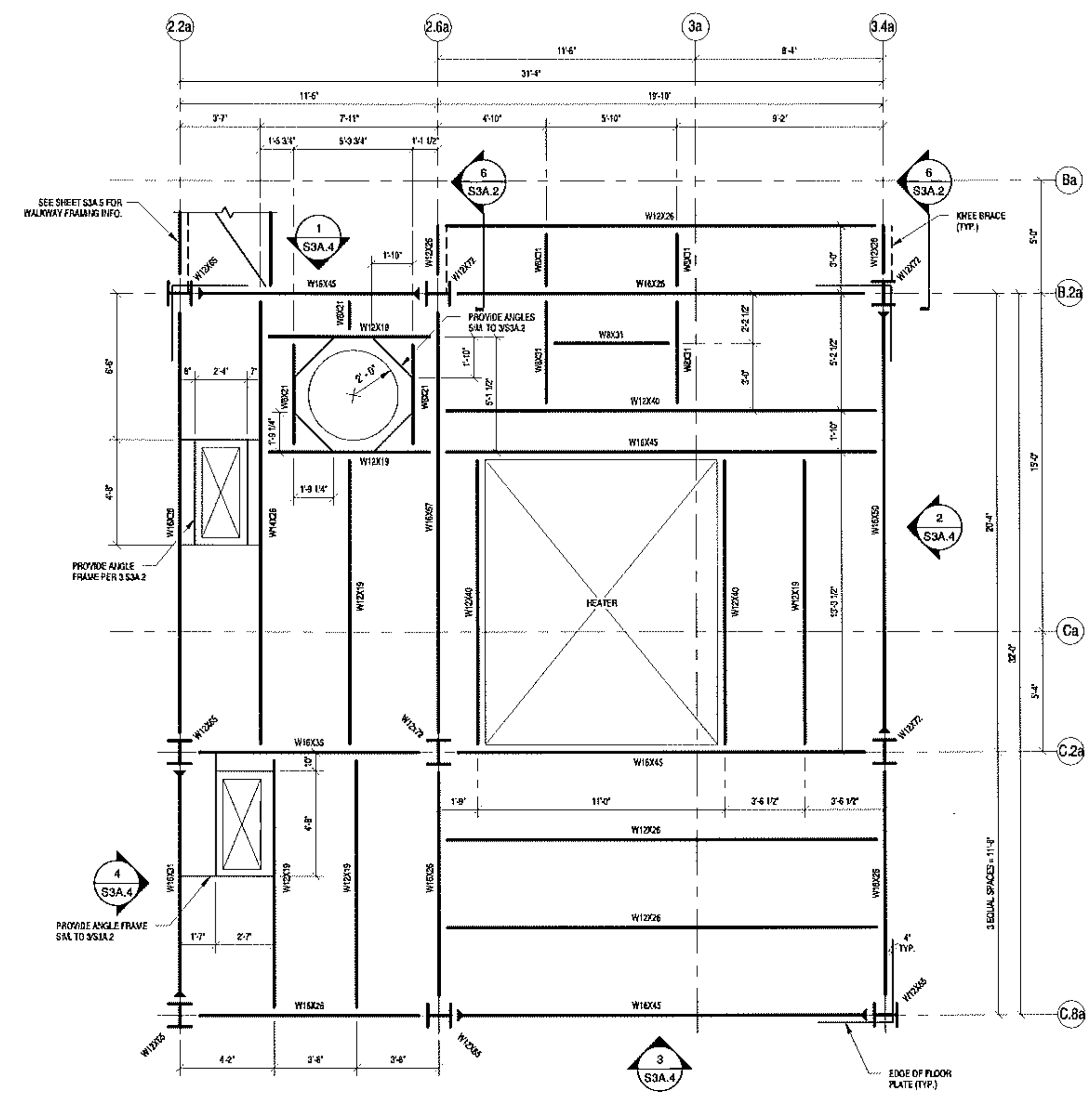

2 LINE 'A' FRAMING PLAN - LEVEL 3 (TOP OF BEAM ELEVATION = +34'-6")

SCALE: 1/4" = 1'-0"

NOTES:

1. SEE 3/S3A.1 FOR TYPICAL FLOOR CONSTRUCTION AND CONNECTION SCHEDULE. ALL FLOOR AREA NOT COVERED BY PROCESSING EQUIPMENT TO BE DECKED W/ 1/2" CHECKERED PLATE.
3. INDICATES MOMENT CONNECTION. SEE DETAILS 4 & 5 ON SHEET S3A.2 FOR MORE INFORMATION.
4. DESIGN FLOOR LIVE LOAD IS 250 PSF.

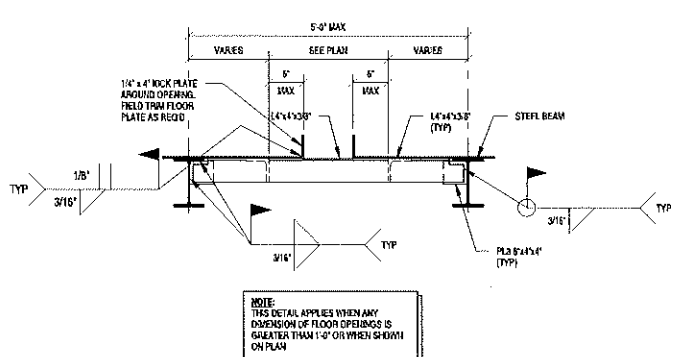

NOTE:
THIS DETAIL APPLIES WHEN ANY DIMENSION OF FLOOR OPENINGS IS GREATER THAN 1'-0" OR WHEN SHOWN ON PLAN

3 SUPPORT DETAIL @ FLOOR OPENINGS

SCALE: 3/4" = 1'-0"

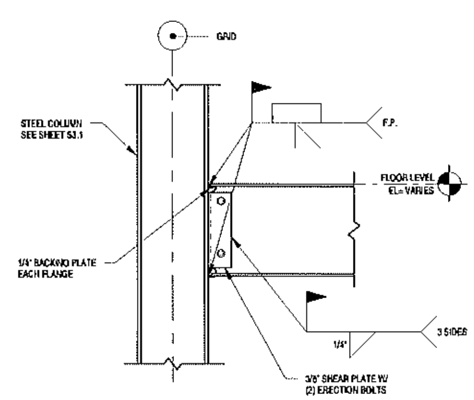

4 TYPICAL MOMENT CONNECTION

SCALE: 3/4" = 1'-0"

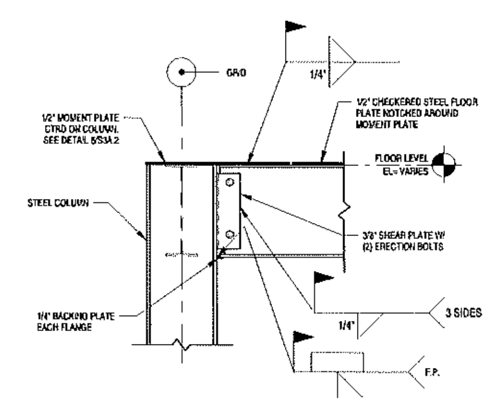

5 TYPICAL MOMENT CONNECTION @ TOP

SCALE: 3/4" = 1'-0"

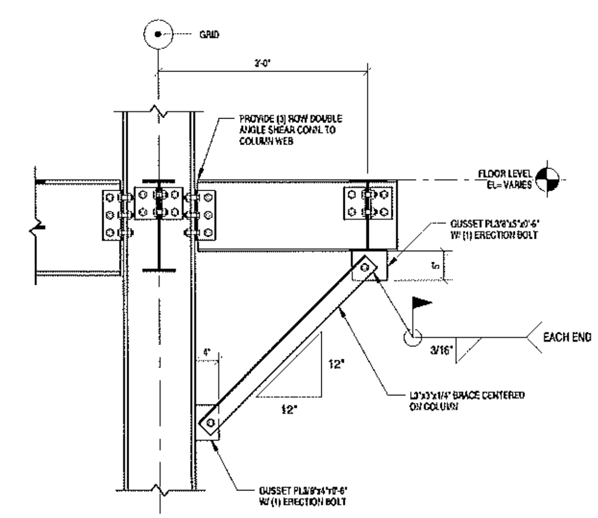

6 BRACING DETAIL @ TOWER

SCALE: 3/4" = 1'-0"

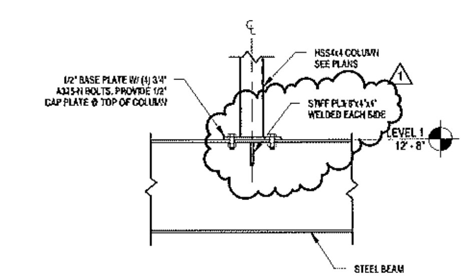

7 STUB COLUMN BASE DETAIL

SCALE: 3/4" = 1'-0"

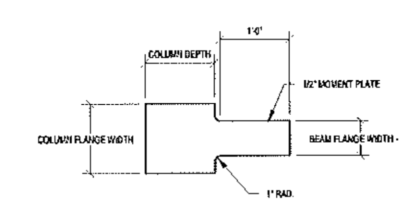

8 DETAIL OF MOMENT PLATE

SCALE: 3/4" = 1'-0"

JOHNSON & PACE INCORPORATED

This document is released for the purpose of interim review under the authority of Richard Lewis, P.E. # 73789 on 02-03-11. It is not to be used for construction, or permit purposes.

SOUTHERN PRECISION SANDS
NEW COATING FACILITY
VOCA, TEXAS

NO.	DESCRIPTION	BY	DATE
1	REVISED AS NOTED	SAW	2-4-11

REVISIONS

LINE 'A' TOWER FRAMING PLANS

ISSUED FOR BID

JOB NO.	ISSUE DATE
2569-10-006-02	01/28/2011
DRAWN BY: SAW	CHECKED BY: JD
APPROVED BY: RL	SCALE: As indicated
SHEET NO.: S3A.2	REVISION NO.: 1

Copyright © 2010, Johnson & Pace Incorporated

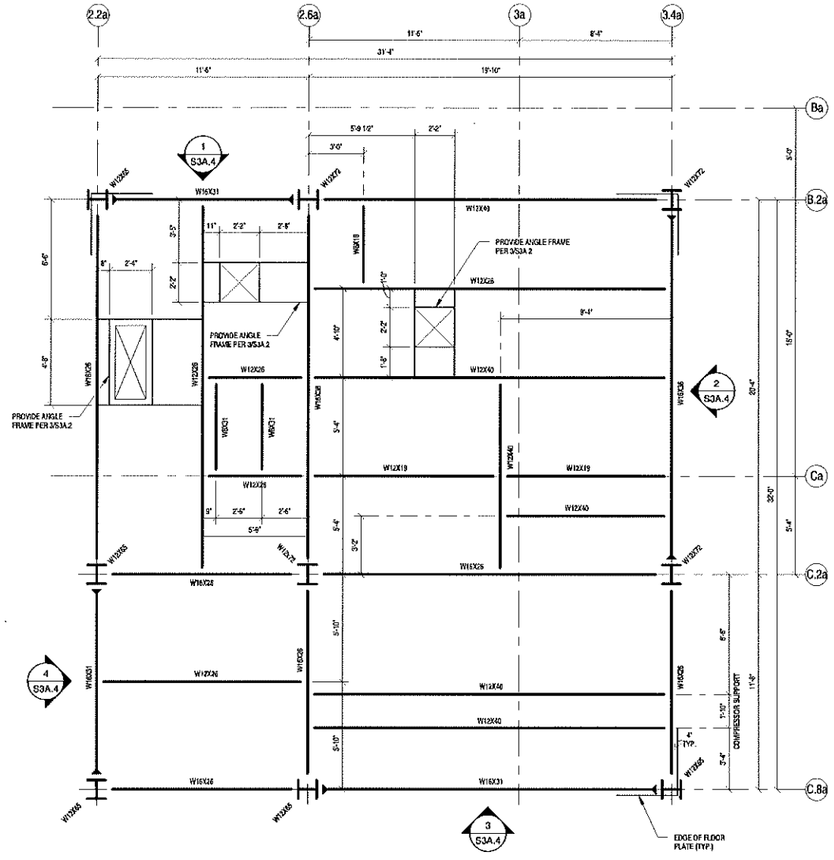

1 LINE 'A' FRAMING PLAN - LEVEL 4 (TOP OF BEAM ELEVATION = +52'-6")

SCALE: 1/4" = 1'-0"

NOTES:

1. SEE S-SA3.1 FOR TYPICAL FLOOR CONSTRUCTION AND CONNECTION SCHEDULE. ALL FLOOR AREA NOT COVERED BY PROCESSING EQUIPMENT TO BE DECKED W/ 1/2" CHECKERED PLATE.
3. ⟷ INDICATES MOMENT CONNECTION. SEE DETAILS 4 & 5 ON SHEET S-A3.2 FOR MORE INFORMATION.
4. DESIGN FLOOR LIVE LOAD IS 100 PSF.

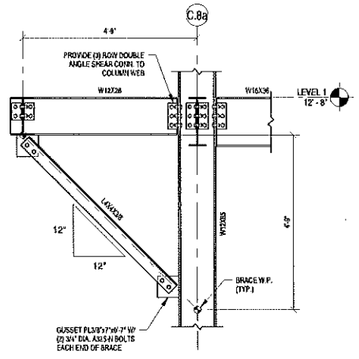

4 SECTION @ BRACE

SCALE: 1/2" = 1'-0"

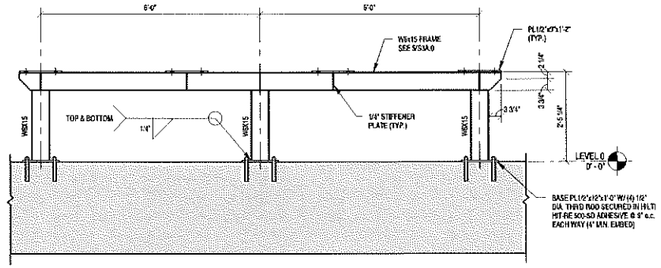

2 SIMPLICITY SUPPORT SECTION

SCALE: 1/2" = 1'-0"

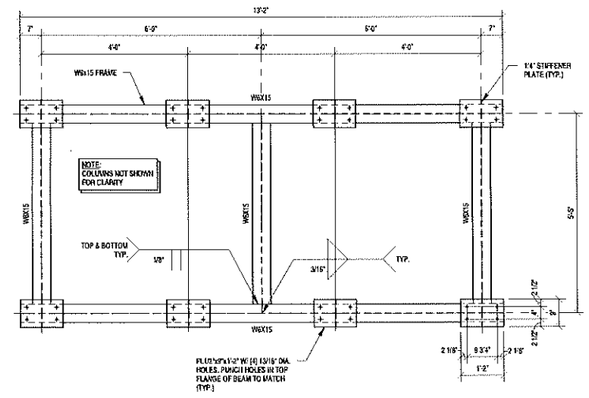

3 SIMPLICITY SUPPORT FRAME

SCALE: 1/2" = 1'-0"

DESIGN LOAD - 15000 LBS

THIS DRAWING AND ITS ONLY SPECIFICATION, INCLUDING ALL DOCUMENTS OR ELECTRONIC DATA, WAS PREPARED BY JOHNSON AND PACE INCORPORATED (JP) AT AUTHORITY OF SERVICE AND SHALL REMAIN THE PROPERTY OF JP. THE INFORMATION SHOWN HEREON SHALL BE USED ONLY FOR THE PURPOSE FOR WHICH SERVICES ARE RENDERED AND NOT FOR THE CONSTRUCTION OR IMPLEMENTATION OF ANY OTHER PROJECT OR ANY EXTENSION OF THIS PROJECT EXCEPT BY AGREEMENT WITH JP. ALL REPORTS, PLANS, OR SPECIFICATIONS PREPARED AND SHALL REMAIN THE PROPERTY OF JP. THE INFORMATION SHOWN HEREON SHALL BE USED ONLY FOR THE PURPOSE FOR WHICH SERVICES ARE RENDERED AND NOT FOR THE CONSTRUCTION OR IMPLEMENTATION OF ANY OTHER PROJECT OR ANY EXTENSION OF THIS PROJECT EXCEPT BY AGREEMENT WITH JP. ALL REPORTS, PLANS, OR SPECIFICATIONS PREPARED AND SHALL REMAIN THE PROPERTY OF JP. ANY UNAUTHORIZED USE OF THESE DOCUMENTS, INCLUDING WITHOUT LIMITATION REPRODUCTION OR ALTERATION, IS STRICTLY PROHIBITED AND SHALL CAUSE THE WRONG OF ANY DAMAGES WHATSOEVER AND ALSO SUBJECT JP TO LIABILITY. THIS DRAWING IS NOT TO BE SCALED. ALL DIMENSIONS SHOWN HEREON AND ON THE DOCUMENTS LISTED ON THE SPECIFICATIONS ARE ONLY APPROXIMATE AND SHALL CAUSE THE WRONG OF ANY DAMAGES WHATSOEVER AND ALSO SUBJECT JP TO LIABILITY. THE DRAWING AND ITS ONLY SPECIFICATION, INCLUDING ALL DOCUMENTS OR ELECTRONIC DATA, WAS PREPARED BY JOHNSON AND PACE INCORPORATED (JP) AT AUTHORITY OF SERVICE AND SHALL REMAIN THE PROPERTY OF JP. THE INFORMATION SHOWN HEREON SHALL BE USED ONLY FOR THE PURPOSE FOR WHICH SERVICES ARE RENDERED AND NOT FOR THE CONSTRUCTION OR IMPLEMENTATION OF ANY OTHER PROJECT OR ANY EXTENSION OF THIS PROJECT EXCEPT BY AGREEMENT WITH JP. ALL REPORTS, PLANS, OR SPECIFICATIONS PREPARED AND SHALL REMAIN THE PROPERTY OF JP. ANY UNAUTHORIZED USE OF THESE DOCUMENTS, INCLUDING WITHOUT LIMITATION REPRODUCTION OR ALTERATION, IS STRICTLY PROHIBITED AND SHALL CAUSE THE WRONG OF ANY DAMAGES WHATSOEVER AND ALSO SUBJECT JP TO LIABILITY. THIS DRAWING IS NOT TO BE SCALED. ALL DIMENSIONS SHOWN HEREON AND ON THE DOCUMENTS LISTED ON THE SPECIFICATIONS ARE ONLY APPROXIMATE AND SHALL CAUSE THE WRONG OF ANY DAMAGES WHATSOEVER AND ALSO SUBJECT JP TO LIABILITY.

Filename: C:\Users\jpadmin\Documents\2569-10-006-02 STRUCTURAL_Johnson.rvt

Plotted: 3/30/2011 4:12:08 PM

Copyright © 2010, Johnson & Pace Incorporated

JOHNSON & PACE INCORPORATED
ENGINEERING - ARCHITECTURE - SURVEYING
1201 NW LOOP 281, SUITE 100, LONGVIEW, TEXAS 75604
(903) 757-8001 FAX (903) 757-8003
www.johnsonpace.com

This document is released for the purpose of interim review under the authority of Jason W. Dunn, Texas R.E. 70789 on 02-25-11. It is not to be used for construction or permit purposes.

SOUTHERN PRECISION SANDS NEW COATING FACILITY VOCA, TEXAS

REVISIONS

NO.	DESCRIPTION	BY	DATE

LINE 'A' TOWER FRAMING PLANS

ISSUED FOR BID

JOB NO.	2569-10-006-02
DATE	01/25/2011
DRAWN BY	SAW
CHECKED BY	JD
APPROVED BY	RL
SCALE	As Indicated
SHEET NO.	S3A.3

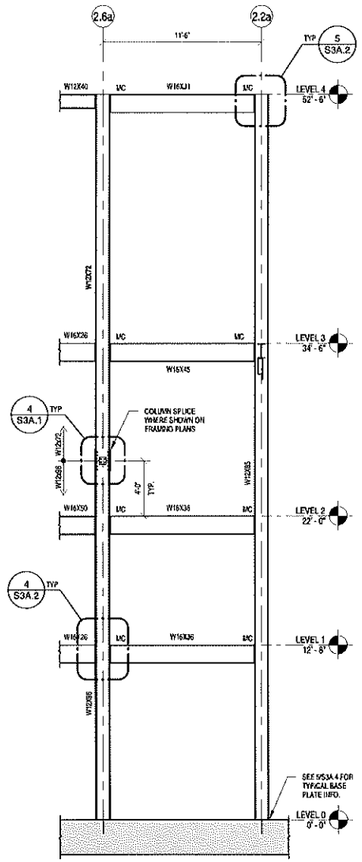

1 ELEVATION ALONG GRID 'B.2a' LOOKING SOUTH

SCALE: 3/16" = 1'-0"

NOTE:

'I/C' INDICATES MOVEMENT CONNECTION. SEE DETAILS 4 & 5 ON SHEET S3A.2 FOR MORE INFORMATION

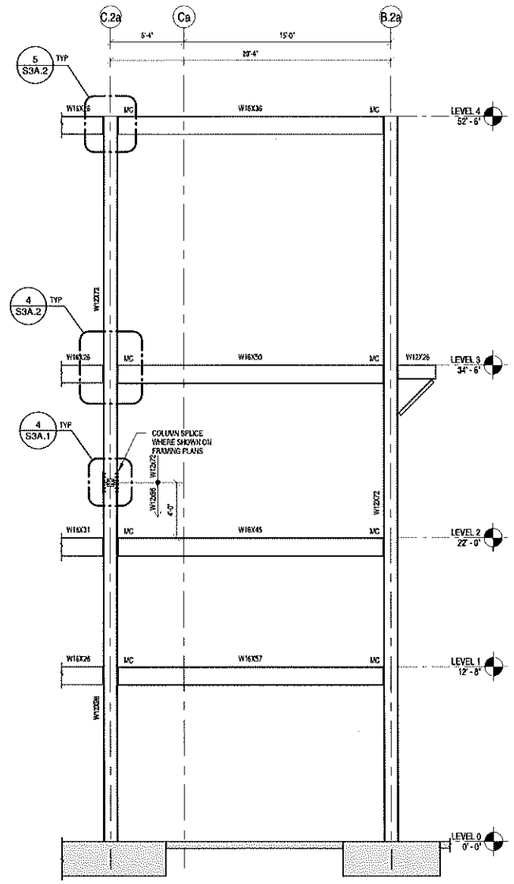

2 ELEVATION ALONG GRID '3.4a' LOOKING WEST

SCALE: 3/16" = 1'-0"

NOTE:

'I/C' INDICATES MOVEMENT CONNECTION. SEE DETAILS 4 & 5 ON SHEET S3A.2 FOR MORE INFORMATION.

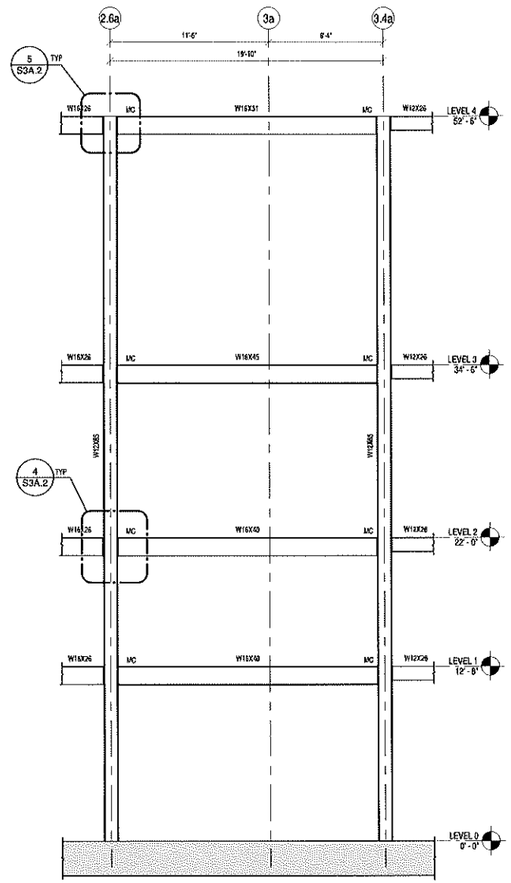

3 ELEVATION ALONG GRID 'C.8a' LOOKING NORTH

SCALE: 3/16" = 1'-0"

NOTE:

'I/C' INDICATES MOVEMENT CONNECTION. SEE DETAILS 4 & 5 ON SHEET S3A.2 FOR MORE INFORMATION.

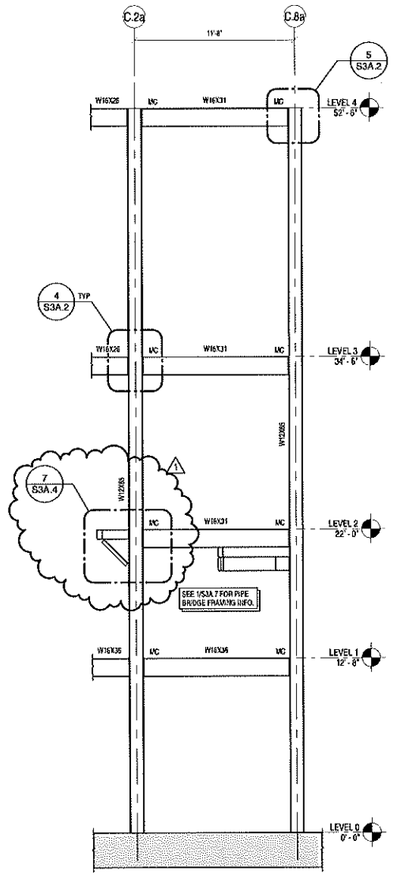

4 ELEVATION ALONG GRID '2.2a' LOOKING EAST

SCALE: 3/16" = 1'-0"

NOTE:

'I/C' INDICATES MOVEMENT CONNECTION. SEE DETAILS 4 & 5 ON SHEET S3A.2 FOR MORE INFORMATION

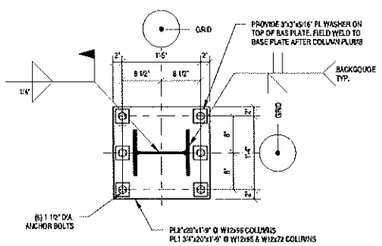

5 ANCHOR BOLT LAYOUT

SCALE: 3/4" = 1'-0"

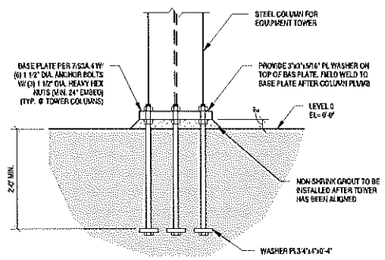

6 TYPICAL TOWER COLUMN BASE DETAIL

SCALE: 3/4" = 1'-0"

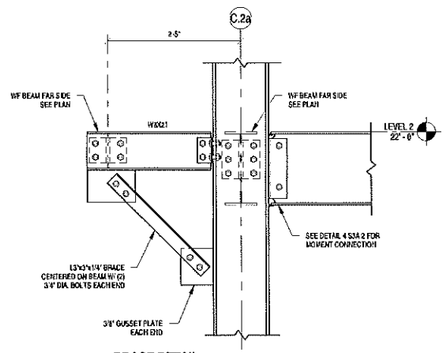

7 BRACE DETAIL

SCALE: 3/4" = 1'-0"

THESE DRAWINGS AND PLANS, SPECIFICATIONS, INCLUDING ALL DOCUMENTS ON ELECTRONIC MEDIA, HERE PREPARED BY JOHNSON & PACE, INC. AND ARE THE PROPERTY OF JOHNSON & PACE, INC. THE INFORMATION CONTAINED ON THESE DOCUMENTS IS TO BE USED ONLY FOR THE PURPOSES OF ESTIMATING, CONSTRUCTING, OR OBTAINING THE NECESSARY GOVERNMENTAL APPROVALS FOR THE DESIGNATED LOCATION OR SITE SPECIFIED HERE. ANY UNAUTHORIZED USE OF THESE DOCUMENTS, INCLUDING WITHOUT LIMITATION REPRODUCTION OR ALTERATION, EFFECTIVELY PERMITS THE USER TO CLAIM THE WORKS OF ANY EXPRESSED WARRANTIES AND ALSO EXPOSES ANY UNAUTHORIZED USER TO LIABILITY FOR ANY UNANTICIPATED USE OF CHANGES.

Filename: G:\projects\southern\Document\2508-13-005-02 STRUCTURAL_johnson.rvt
Plotted: 3/2/2011 4:53:27 PM
Copyright © 2010, Johnson & Pace Incorporated

JOHNSON & PACE INCORPORATED
ENGINEERING • ARCHITECTURE • SURVEYING
1201 NW LOOP 281, SUITE 100, AUSTIN, TEXAS 78213
(512) 343-5257 FAX (512) 343-5263
website: www.johnsonpace.com

This document is released for the purpose of interim review under the authority of Richard Ladd, P.E. of Austin, Texas. It is not to be used for construction, or permit purposes.

SOUTHERN PRECISION SANDS NEW COATING FACILITY VOCA, TEXAS

REVISIONS

NO.	DESCRIPTION	BY	DATE
1	REVISED AS NOTED	SAW	2-4-11

LINE 'A' TOWER ELEVATIONS

ISSUED FOR BID

JOB NO.	2508-13-005-02
DATE	01/25/2011
DRAWN BY	SAW
DESIGNED BY	JD
APPROVED BY	RL
SCALE	As indicated
SHEET NO.	S3A.4
REVISION NO.	1

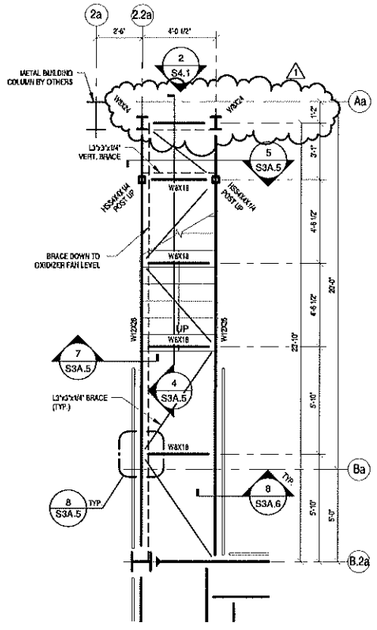

1 LINE 'A' WALKWAY PLAN (T.O. BEAM EL= +34'-5 1/4")

SCALE: 1/4" = 1'-0"

NOTES:

1. FLOOR SYSTEM IS BAR GRATING W/ 1 1/4"x3/16" BEARING BARS @ 1 3/16" o.c. & CROSS BARS @ 4" o.c. SERIES GW AS MANUFACTURED BY MCNICHOLS OR APPROVED EQUAL. BAR GRATING SHALL BE ATTACHED TO THE STRUCTURE USING F-9 GRATING CLIPS SECURED WITH SELF TAPPING SS SCREWS. (PRE-DRILLING MAY BE REQUIRED) THERE SHALL BE A MINIMUM OF 2 CLIPS PER PANEL PER SUPPORT AND A MINIMUM OF 4 CLIPS PER PANEL.
2. FLOOR HAS BEEN DESIGNED FOR A LIVE LOAD OF 100 PSF.

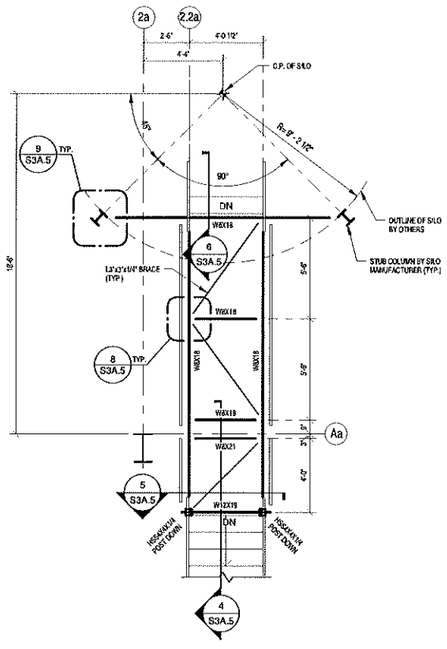

2 LINE 'A' WALKWAY PLAN (T.O. BEAM EL= +40'-6")

SCALE: 1/4" = 1'-0"

NOTES:

1. FLOOR SYSTEM IS BAR GRATING W/ 1 1/4"x3/16" BEARING BARS @ 1 3/16" o.c. & CROSS BARS @ 4" o.c. SERIES GW AS MANUFACTURED BY MCNICHOLS OR APPROVED EQUAL. BAR GRATING SHALL BE ATTACHED TO THE STRUCTURE USING F-9 GRATING CLIPS SECURED WITH SELF TAPPING SS SCREWS. (PRE-DRILLING MAY BE REQUIRED) THERE SHALL BE A MINIMUM OF 2 CLIPS PER PANEL PER SUPPORT AND A MINIMUM OF 4 CLIPS PER PANEL.
2. FLOOR HAS BEEN DESIGNED FOR A LIVE LOAD OF 100 PSF.

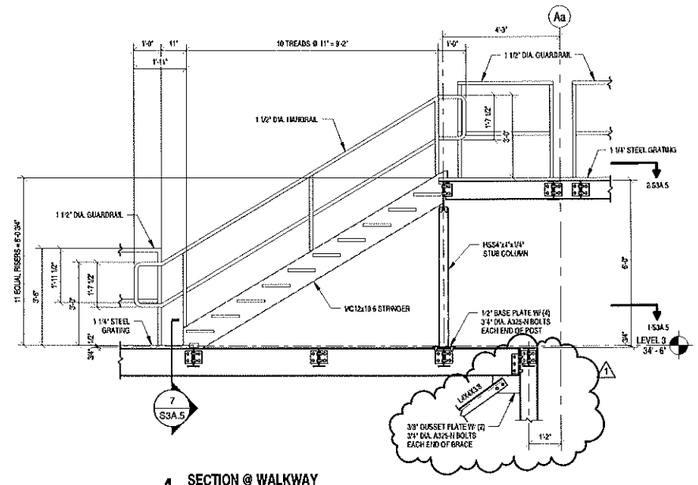

4 SECTION @ WALKWAY

SCALE: 3/8" = 1'-0"

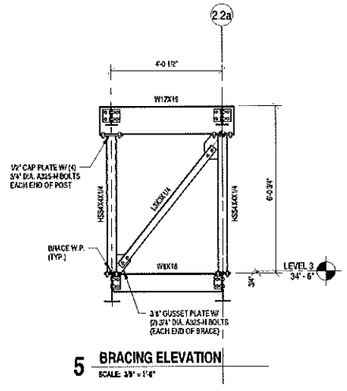

5 BRACING ELEVATION

SCALE: 3/8" = 1'-0"

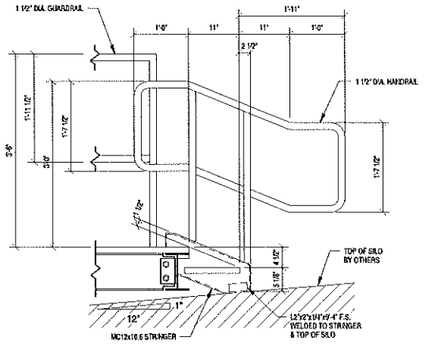

6 SECTION @ WALKWAY

SCALE: 3/4" = 1'-0"

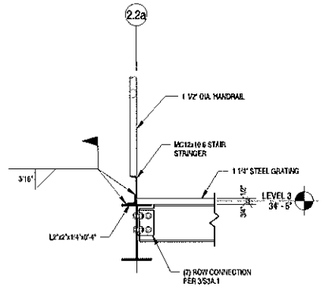

7 SECTION @ WALKWAY

SCALE: 3/4" = 1'-0"

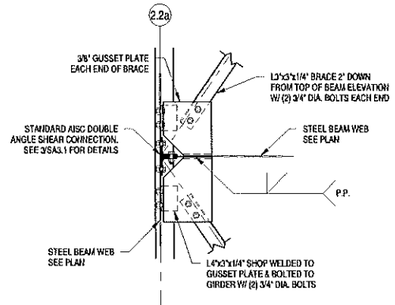

8 TYPICAL HORIZONTAL BRACE CONN.

SCALE: 3/4" = 1'-0"

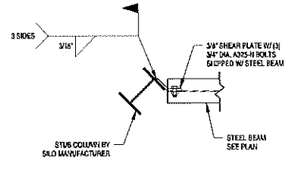

9 BEAM CONNECTION DETAIL

SCALE: 3/4" = 1'-0"

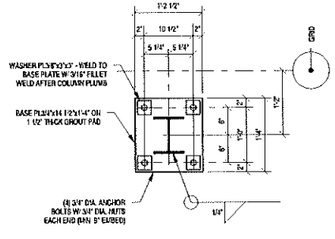

10 PLATFORM COLUMN BASE

SCALE: 3/4" = 1'-0"

This drawing and its specifications, including all designs or instruments of service and shall remain the property of J.P. The information contained herein shall be used only for the purpose of designing, constructing, or repairing the work shown herein or at the designated location in the specified site. Any unauthorized use of J.P. Reproduction or distribution of this instrument is strictly prohibited and shall cause the owner of any derived work hereunder and also shall be responsible for any damages or losses incurred by J.P. The contractor use of such unauthorized use or changes.

Filename: C:\Users\jpadmin\Documents\2009-10-006-02 STRUCTURAL_jpadmin.rvt

Printed: 2/22/2011 4:12:08 PM

Copyright © 2010, Johnson & Pace Incorporated

JOHNSON & PACE INCORPORATED
ENGINEERING • ARCHITECTURE • SURVEYING
1201 NORTH 10th, SUITE 100,
CHARLOTTE, NORTH CAROLINA 28202
704.332.7155 FAX 704.332.7156
website: www.johnsonpace.com

This document is released for the purpose of interim review under the authority of Jeffrey Allen Lewis, P.E. 7/27/95 on 02-23-11. It is not to be used for construction, or permit purposes.

SOUTHERN PRECISION SANDS
NEW COATING FACILITY
VOCA, TEXAS

REVISIONS

NO.	DESCRIPTION	BY	DATE
1	REVISED AS NOTED	SAW	2-25-11

LINE 'A' WALKWAY FRAMING PLAN

ISSUED FOR BID

JOB NO: 2009-10-006-02		ISSUE DATE: 01/26/2011	
DRAWN BY: SAW	DESIGNED BY: JD	APPROVED BY: RL	SCALE: As Indicated
SHEET NO: S3A.5		VERSION NO: 1	

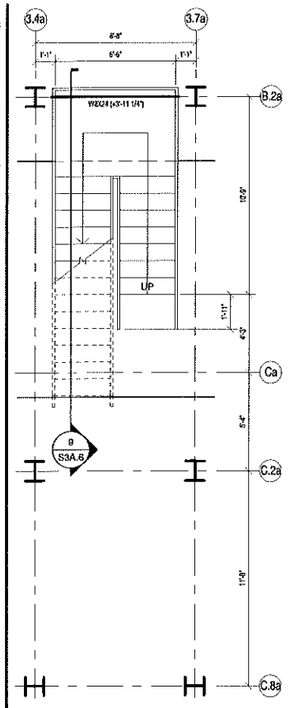

1 LEVEL 0 STAIR PLAN

SCALE: 1/4" = 1'-0"

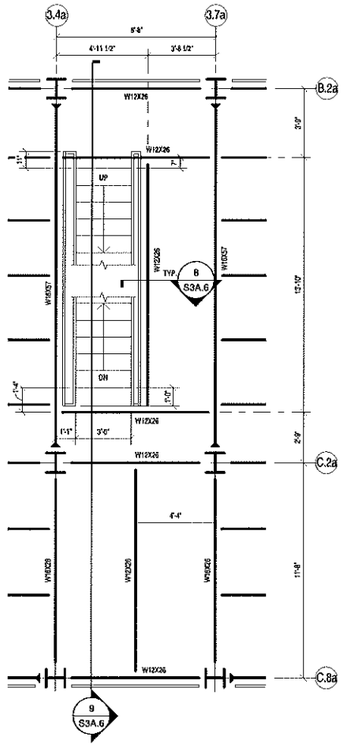

2 LEVEL 1 STAIR PLAN

SCALE: 1/4" = 1'-0"

NOTE:
FLOOR SUPPORTED BY WF BEAMS TO BE 1/2" CHECKERED PLATE.
STAIR TREADS AND LANDINGS TO BE 1" STEEL BAR GRATING.

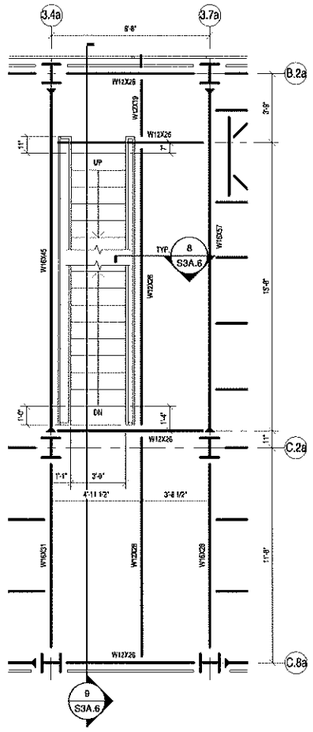

3 LEVEL 2 STAIR PLAN

SCALE: 1/4" = 1'-0"

NOTE:
FLOOR SUPPORTED BY WF BEAMS TO BE 1/2" CHECKERED PLATE.
STAIR TREADS AND LANDINGS TO BE 1" STEEL BAR GRATING.

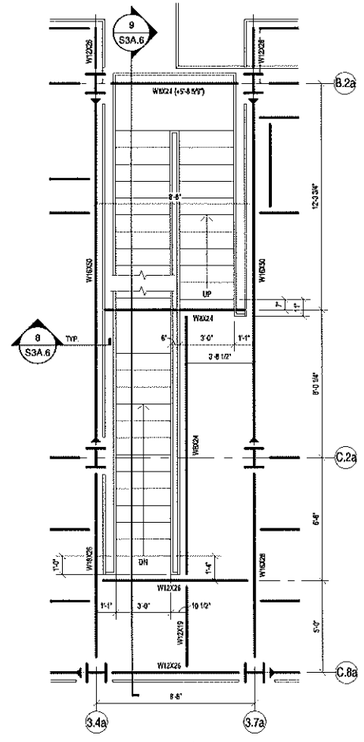

4 LEVEL 3 STAIR PLAN

SCALE: 1/4" = 1'-0"

NOTE:
FLOOR SUPPORTED BY WF BEAMS TO BE 1/2" CHECKERED PLATE.
STAIR TREADS AND LANDINGS TO BE 1" STEEL BAR GRATING.

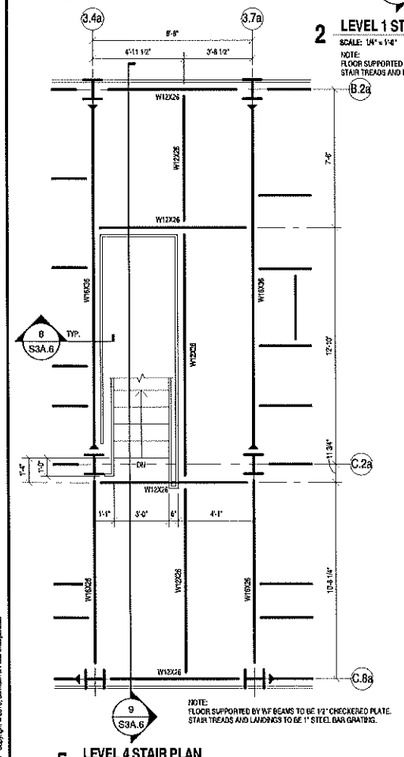

NOTE:
FLOOR SUPPORTED BY WF BEAMS TO BE 1/2" CHECKERED PLATE.
STAIR TREADS AND LANDINGS TO BE 1" STEEL BAR GRATING.

5 LEVEL 4 STAIR PLAN

SCALE: 1/4" = 1'-0"

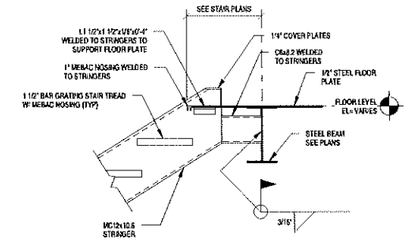

7 TYPICAL STRINGER DETAIL

SCALE: 3/4" = 1'-0"

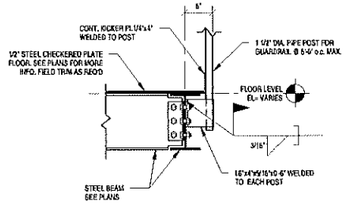

8 TYPICAL GUARDRAIL DETAIL

SCALE: 3/4" = 1'-0"

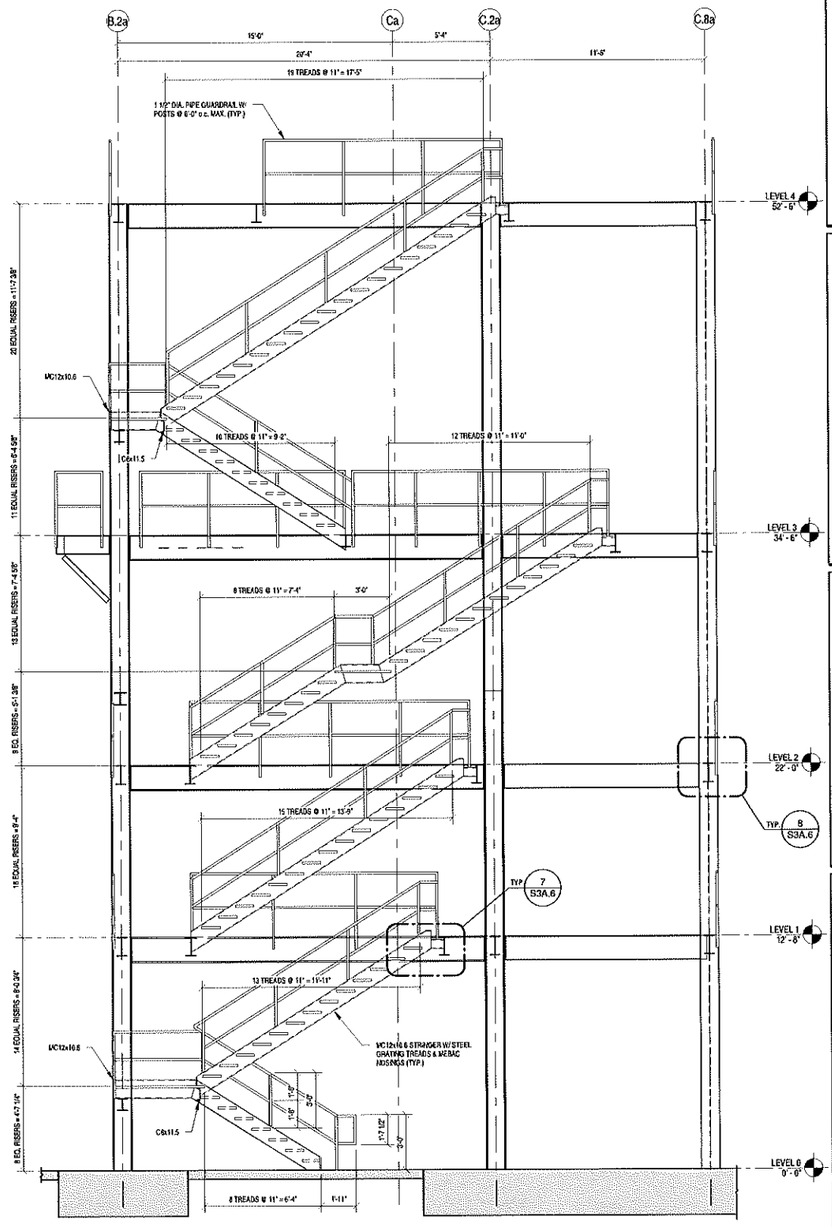

9 OVERALL STAIR SECTION

SCALE: 1/4" = 1'-0"

JOHNSON & PACE INCORPORATED
ENGINEERING • ARCHITECTURE • SURVEYING
1331 NOLLEY DR., SUITE 100
HOUSTON, TEXAS 77008
(713) 863-1313 FAX (713) 863-1333
www.johnsonpace.com

This document is released for the purpose of interim review under the authority of Jon D. Wade, P.E. No. 73709 on 02-03-11. It is not to be used for construction or permit purposes.

SOUTHERN PRECISION SANDS NEW COATING FACILITY VOCA, TEXAS

REVISIONS

NO.	DESCRIPTION	BY	DATE

STAIR PLANS

ISSUED FOR BID

JOB NO: 2505-10-005-02			DATE: 01/03/2011
DRAWN BY: SAW	CHECKED BY: JD	APPROVED BY: RL	SCALE: As indicated
SHEET NO: S3A.6			REVISION NO:

THIS DRAWING AND RELATED SPECIFICATION, INCLUDING ALL DOCUMENTS ON ELECTRONIC MEDIA, WERE PREPARED BY JOHNSON AND PACE INCORPORATED (JP) AS INSTRUMENTS OF SERVICE AND SHALL REMAIN THE PROPERTY OF JP. THE INFORMATION SHOWN HEREON SHALL BE USED ONLY BY THE CLIENT TO WHOM IT IS ADDRESSED AND ONLY FOR THE PURPOSE OF REVIEWING, CONSTRUCTING, OR INSTALLING THE WORK SHOWN HEREON IF THE RELEVANT LOCATION ON THE SPECIFIED SITE. ANY UNAUTHORIZED USE OF THIS DOCUMENT, INCLUDING WITHOUT LIMITATION REPRODUCTION OR ALTERATION, IS STRICTLY PROHIBITED AND SHALL CAUSE THE WITHDRAWAL OF ANY EXPRESSED WARRANTIES AND ALSO CAUSE THE WITHDRAWAL OF ANY IMPLIED WARRANTIES AND ALSO SUBJECT ANY VIOLATOR TO INDEMNIFY AND HOLD HARMLESS JP FROM THE CONSEQUENCES OF SUCH UNAUTHORIZED USE OR ALTERATION.

Copyright © 2010, Johnson & Pace Incorporated

Filename: C:\Users\jdwade\Desktop\Documents\2505-10-005-02 STRUCTURAL_Jonathan.rvt

Plotted: 3/3/2011 4:13:11 PM

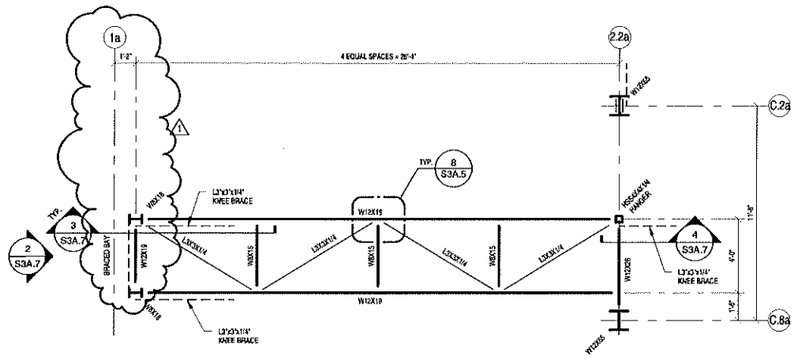

1 LINE 'A' FRAMING PLAN - LEVEL 2 (TOP OF BEAM ELEVATION = +22'-0")
SCALE: 1/4" = 1'-0"

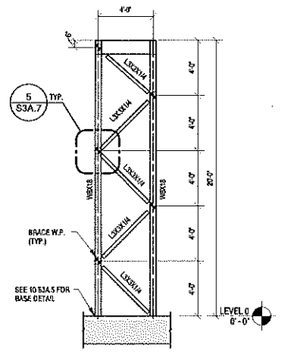

2 BRACING ELEVATION
SCALE: 3/16" = 1'-0"

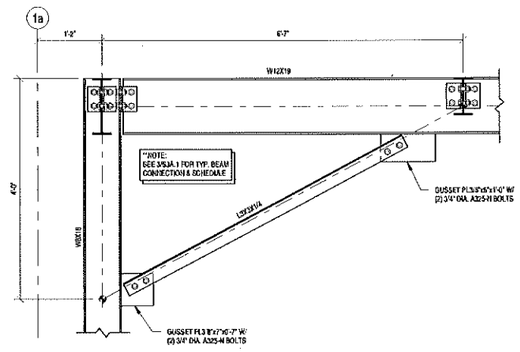

3 BRACING DETAIL
SCALE: 3/4" = 1'-0"

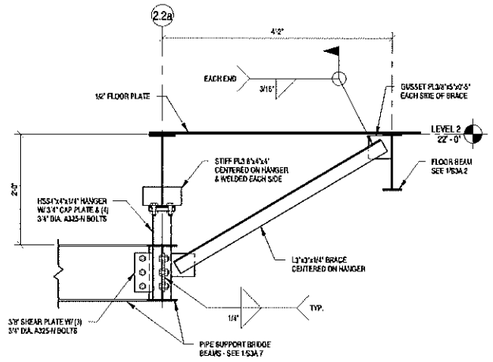

4 BRACING DETAIL
SCALE: 3/4" = 1'-0"

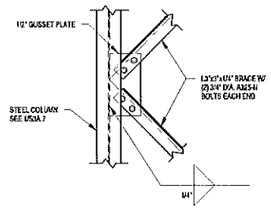

5 BRACING DETAIL
SCALE: 3/4" = 1'-0"

THIS DRAWING AND ALL RELATED SPECIFICATIONS, INCLUDING ALL DOCUMENTS ON ELECTRONIC MEDIA, WERE PREPARED BY JOHNSON AND PACE INCORPORATED (JP) AT INSTANCE OF SERVICE AND SHALL REMAIN THE PROPERTY OF JP. THE INFORMATION SHOWN HEREON SHALL BE USED ONLY FOR THE SCOPE OF SERVICES AND INTENDED USE AS INDICATED AND ONLY FOR THE PURPOSE OF PROVIDING CONSTRUCTING OR INSTALLING THE WORK SHOWN HEREON AT THE DESIGNATED LOCATION ON THIS SPECIFIED SITE. ANY UNAUTHORIZED USE OF THESE DOCUMENTS, INCLUDING WITHOUT LIMITATION REPRODUCTION IN ALL TRADES, IS STRICTLY PROHIBITED AND SHALL CAUSE THE OWNER OF ANY EXPRESSED WARRANTIES AND ALSO STEP OF ANY LIABILITY WHICH MAY ARISE FROM THE CONTRACTOR, USE OR REUSE OF INFORMATION DESCRIBED OR CHANGE.

Filename: C:\Users\admin\Documents\2509-10-009-02 STRUCTURAL_Structure.rvt

Plotted: 5/20/2011 4:52:12 PM

Copyright © 2010, Johnson & Pace Incorporated

JOHNSON & PACE INCORPORATED
ENGINEERING • ARCHITECTURE • SURVEYING
1320 NW LOOP 281, SUITE 100
LONGVIEW, TEXAS 75604
(903) 663-0000 FAX (903) 663-0001
WEBSITE: www.jpinc.com

This document is released for the purpose of interim review under the authority of Jason D. Pace, TX No. 70799 on 02-03-11. It is not to be used for construction or permit purposes.

SOUTHERN PRECISION SANDS
NEW COATING FACILITY
VOCA, TEXAS

REVISIONS

NO.	DESCRIPTION	BY	DATE
1	REVISED AS NOTED	SAW	2-4-11

PIPE SUPPORT BRIDGE DETAILS

ISSUED FOR BID

JOB NO. 2509-10-009-02		ISSUE DATE: 01/28/2011	
DRAWN BY: SAW	CHECKED BY: JD	APPROVED BY: RL	SCALE: As Indicated
SHEET NO.: S3A.7		REVISION NO.: 1	

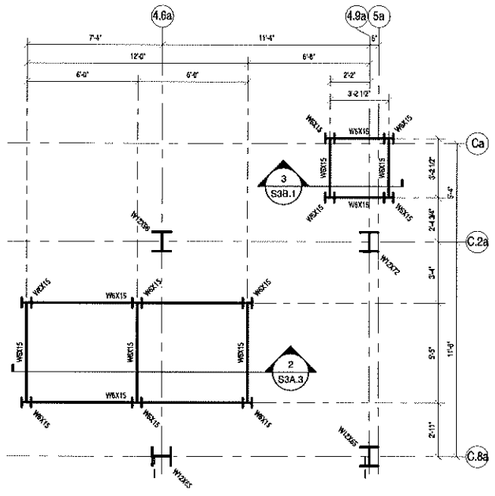

1 SCREEN SUPPORT FRAMING PLAN
SCALE: 1/4" = 1'-0"

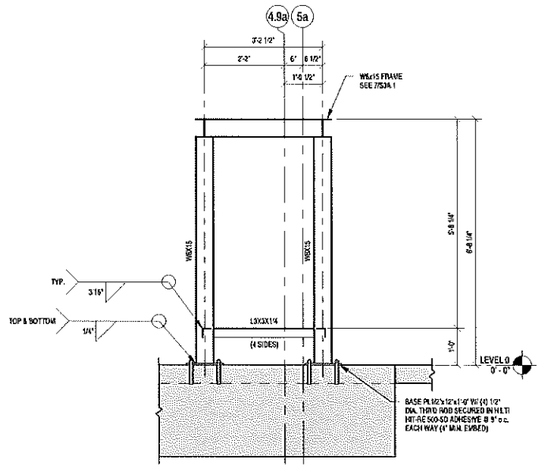

3 KASON SCREEN SUPPORT
SCALE: 1/2" = 1'-0"

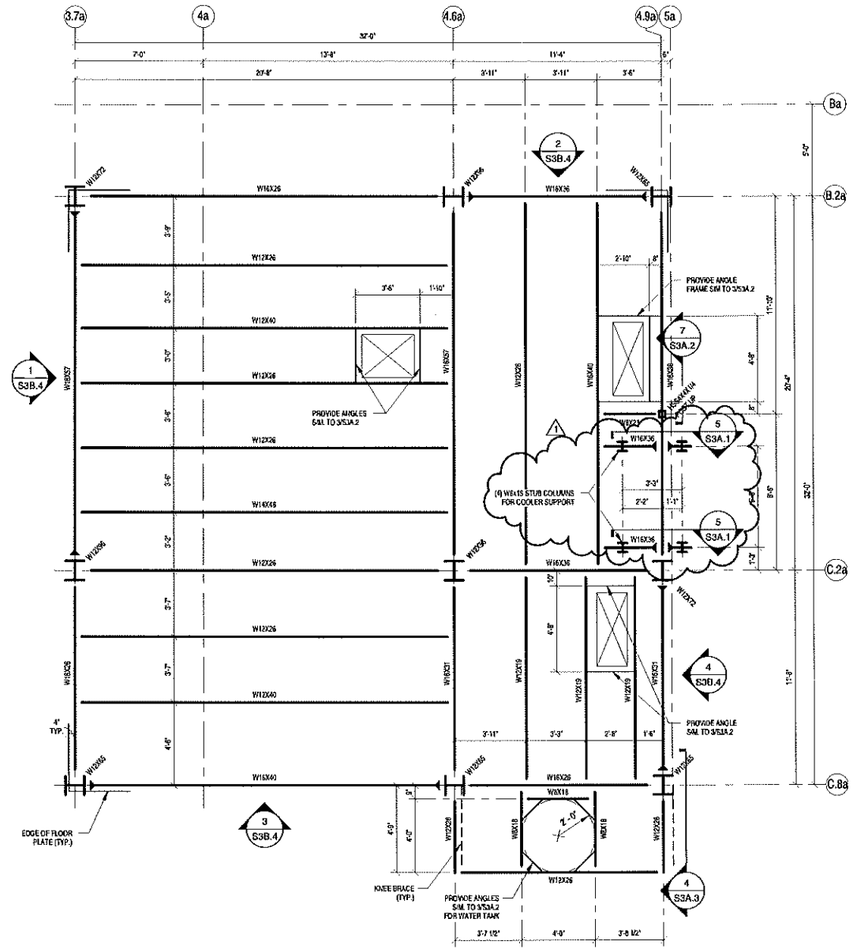

2 LINE 'B' FRAMING PLAN - LEVEL 1 (TOP OF BEAM ELEVATION = +12'-8")
SCALE: 1/4" = 1'-0"

NOTES:

1. SEE 3/S3.1 FOR TYPICAL FLOOR CONSTRUCTION AND CONNECTION SCHEDULE. ALL FLOOR AREA NOT COVERED BY PROCESSING EQUIPMENT TO BE GRADED W/ 1/2" CHECKERED PLATE.
2. ▶ INDICATES MOMENT CONNECTION. SEE DETAILS 4 & 5 ON SHEET S4.3.2 FOR MORE INFORMATION.
3. DESIGN FLOOR LIVE LOAD IS 250 PSF.

THIS DRAWING AND RELATED SPECIFICATIONS, INCLUDING ALL DOCUMENTS IN ELECTRONIC MEDIA, WERE PREPARED BY JOHNSON AND PACE INCORPORATED (JP) AS INSTRUMENTS OF SERVICE AND SHALL REMAIN THE PROPERTY OF JP. THE INFORMATION SHOWN HEREON SHALL BE USED ONLY FOR THE PURPOSE OF OBTAINING CONSTRUCTION OR REVISION OF WORK SHOWN HEREON AT THE DESIGNATED LOCATION ON THE DESIGNATED SITE. ANY UNAUTHORIZED USE OF THESE DOCUMENTS, INCLUDING WITHOUT LIMITATION REPRODUCTION IN ANY MEDIA, IS STRICTLY PROHIBITED AND SHALL CAUSE THE WAIVER OF ANY EXPRESSED WARRANTIES AND NO ADDITIONAL WARRANTIES WHICH MAY ARISE FROM THE CONSTRUCTION, USE OR REPRODUCTION OF WORK CONSTRUCTED SITE IN CHANGE.

Copyright © 2010, Johnson & Pace Incorporated

Filename: C:\Users\jdoe\Documents\Southern\C08-10-005-02 STRUCTURAL_jpwilliam.rvt

Plotted: 2/20/2011 4:12:12 PM

JOHNSON & PACE INCORPORATED
ENGINEERING • ARCHITECTURE • SURVEYING
1201 NW LOOP 281, SUITE 100
LONGVIEW, TEXAS 75604
(903)757-0400 FAX (903)753-4403
WEB SITE: www.johnsonpace.com

This document is released for the purpose of interim review under the authority of Ronald L. Johnson, P.E. 70759 on 02-25-11. It is not to be used for construction, or permit purposes.

SOUTHERN PRECISION SANDS
NEW COATING FACILITY
VOCA, TEXAS

REVISIONS

NO.	DESCRIPTION	BY	DATE
1	REVISED AS NOTED	SAW	2-25-11

LINE 'B' TOWER FRAMING PLANS

ISSUED FOR BID

JOB NO: 2008-10-005-02		ISSUE DATE: 01/26/2011	
DRAWN BY: SAW	CHECKED BY: JD	APPROVED BY: RL	SCALE: As Indicated
SHEET NO: S3B.1		REVISION NO: 1	

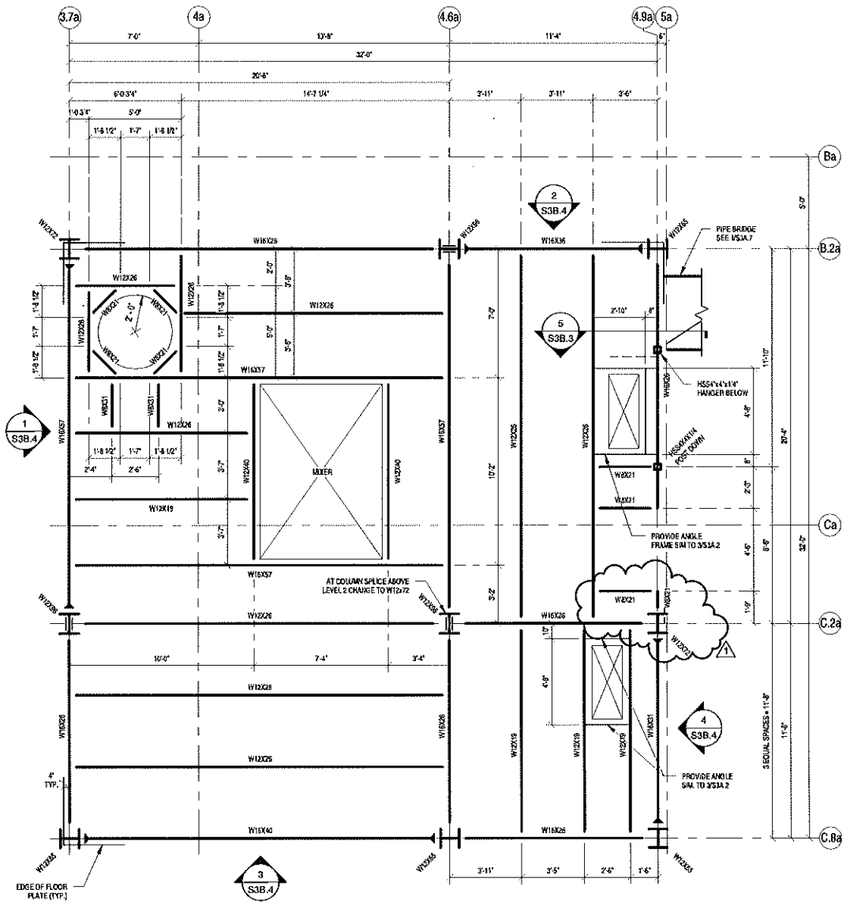

1 LINE 'B' FRAMING PLAN - LEVEL 2 (TOP OF BEAM ELEVATION = +22'-0")

SCALE: 1/4" = 1'-0"

NOTES:

1. SEE S-S3A.1 FOR TYPICAL FLOOR CONSTRUCTION AND CONNECTION SCHEDULE. ALL FLOOR AREA NOT COVERED BY PROCESSING EQUIPMENT TO BE DECKED W/ 1/2" CHECKERED PLATE.
2. INDICATES COLUMN SPLICE. SEE DETAIL 4/S3A.1 FOR MORE INFORMATION.
3. INDICATES MOMENT CONNECTION. SEE DETAILS 4 & 5 ON SHEET S3A.2 FOR MORE INFORMATION.
4. DESIGN FLOOR LIVE LOAD IS 250 PSF.

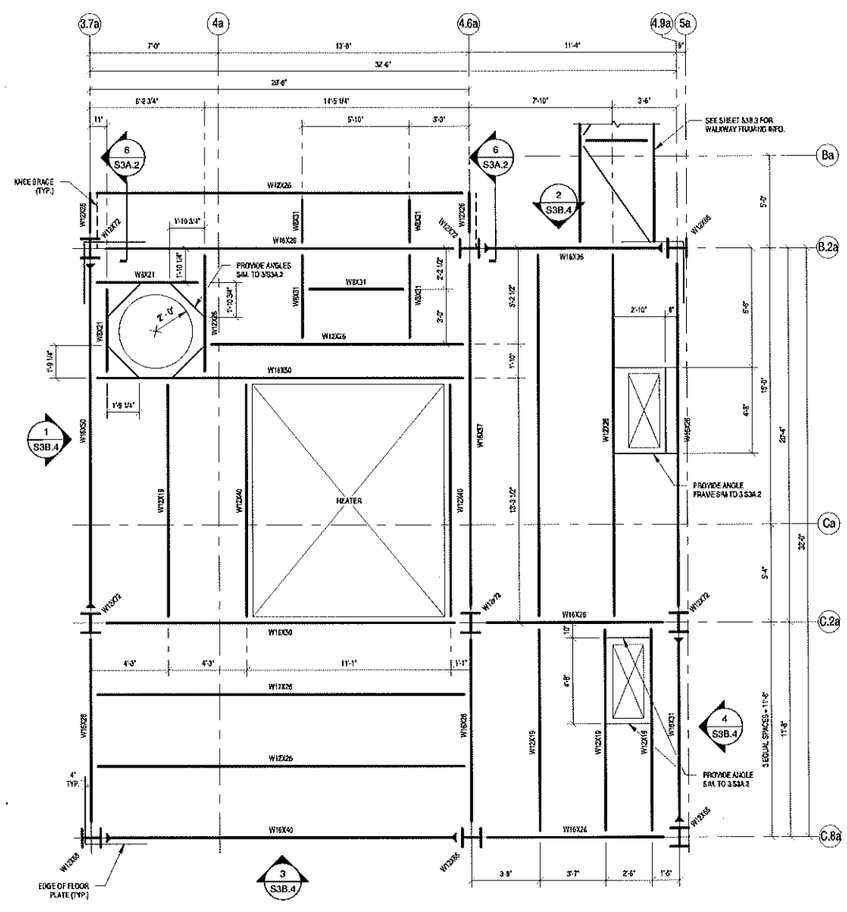

2 LINE 'B' FRAMING PLAN - LEVEL 3 (TOP OF BEAM ELEVATION = +34'-6")

SCALE: 1/4" = 1'-0"

NOTES:

1. SEE S-S3A.1 FOR TYPICAL FLOOR CONSTRUCTION AND CONNECTION SCHEDULE. ALL FLOOR AREA NOT COVERED BY PROCESSING EQUIPMENT TO BE DECKED W/ 1/2" CHECKERED PLATE.
3. INDICATES MOMENT CONNECTION. SEE DETAILS 4 & 5 ON SHEET S-A3.2 FOR MORE INFORMATION.
4. DESIGN FLOOR LIVE LOAD IS 250 PSF.

THIS DRAWING AND RELATED SPECIFICATIONS, INCLUDING ALL DOCUMENTS STORED ELECTRONICALLY, WERE PREPARED BY JOHNSON AND PACE INCORPORATED (JP) AS INSTRUMENTS OF SERVICE AND SHALL REMAIN THE PROPERTY OF JP. THE INFORMATION SHOWN HEREON SHALL BE LIMITED TO THE CLIENT TO WHOM SERVICES ARE RENDERED AND ONLY FOR THE PURPOSE OF DESIGNING, CONSTRUCTING, OR INSTALLING THE WORK SHOWN HEREON AT THE DESIGNATED LOCATION ON THE SPECIFIED SITE. ANY UNAUTHORIZED USE OF THESE DOCUMENTS, INCLUDING WITHOUT LIMITATION REPRODUCTION OR ALTERATION, IS STRICTLY PROHIBITED AND SHALL CAUSE THE OWNER OF ANY SUPERSEDES WARRANTIES AND HOLD STEPS OF ANY UNRELATED WORK OR AND FROM THE CONSTRUCTION, USE OR REUSE OF SUCH UNAUTHORIZED USE OF CHANGES.

Filename: C:\Users\sawy\AppData\Local\Temp\AcPublish_13-0056\02 STRUCTURAL_Sheet1.dwg
Plotted: 2/2/2011 4:23:13 PM

Copyright © 2010, Johnson & Pace Incorporated

JOHNSON & PACE INCORPORATED
ENGINEERING • ARCHITECTURE • SURVEYING
1321 NW 10TH AVE., SUITE 100
GAINESVILLE, FLORIDA 32601
(352)373-3400 FAX: (352)373-3401
WEBSITE: www.johnsonpace.com

This document is released for the purpose of interim review under the authority of Chapter 62-4, F.A.C. It is not to be used for construction, or permit purposes.

SOUTHERN PRECISION SANDS
NEW COATING FACILITY
VOCA, TEXAS

REVISIONS

NO.	DESCRIPTION	BY	DATE
1	REVISED AS NOTED	SAW	2-4-11

LINE 'B' TOWER FRAMING PLANS

ISSUED FOR BID

JOB NO.	2503-13-006-02
ISSUE DATE	01/28/2011
DRAWN BY	SAW
CHECKED BY	JD
APPROVED BY	RL
SCALE	1/4" = 1'-0"
SHEET NO.	S3B.2
REVISION NO.	1

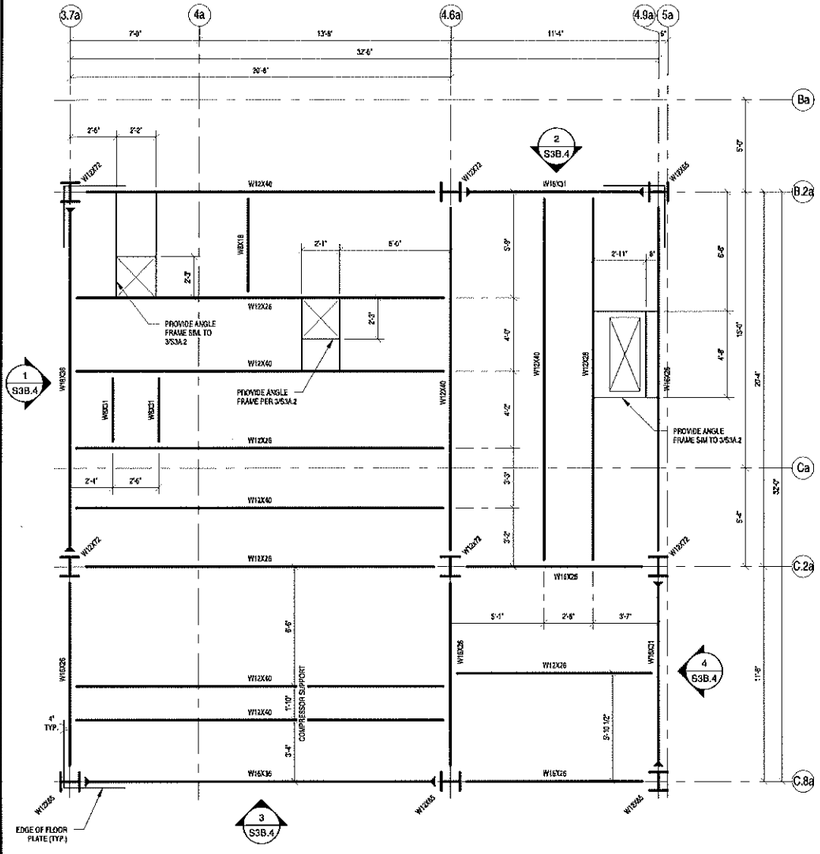

1 LINE 'B' FRAMING PLAN - LEVEL 4 (TOP OF BEAM ELEVATION = +52'-6")
SCALE: 1/4" = 1'-0"

NOTES:

1. SEE S/S3A.1 FOR TYPICAL FLOOR CONSTRUCTION AND CONNECTION SCHEDULE. ALL FLOOR AREA NOT COVERED BY PROCESSING EQUIPMENT TO BE DECKED W/ 1/2" CHECKERED PLATE.
2. INDICATES COLUMN SPLICE. SEE DETAIL 4 S3A.1 FOR MORE INFORMATION.
3. INDICATES MOMENT CONNECTION. SEE DETAILS 4 & 5 ON SHEET S3A.2 FOR MORE INFORMATION.
4. DESIGN FLOOR LIVE LOAD IS 250 PSF.

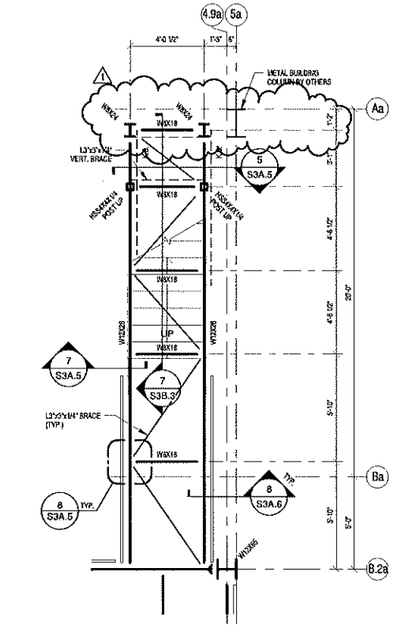

2 LINE 'B' WALKWAY PLAN (T.O. BEAM EL= +34'-5 1/4")
SCALE: 1/4" = 1'-0"

NOTES:

1. FLOOR SYSTEM IS BAR GRATING W/ 1 1/4"x3/16" BEARING BARS @ 1 3/16" o.c. & CROSS BARS @ 4" o.c. SERIES GW AS MANUFACTURED BY MCNICHOLS OR APPROVED EQUAL. BAR GRATING SHALL BE ATTACHED TO THE STRUCTURE USING F-9 GRATING CLIPS SECURED WITH SELF TAPPING SS SCREWS. (PRE-DRILLING MAY BE REQUIRED) THERE SHALL BE A MINIMUM OF 2 CLIPS PER PANEL PER SUPPORT AND A MAXIMUM OF 4 CLIPS PER PANEL.
2. FLOOR HAS BEEN DESIGNED FOR A LIVE LOAD OF 100 PSF.

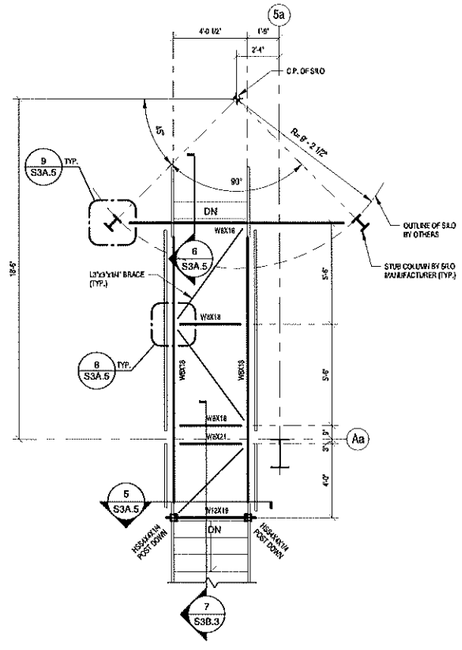

3 LINE 'B' WALKWAY PLAN (T.O. BEAM EL= 40'-6")
SCALE: 1/4" = 1'-0"

NOTES:

1. FLOOR SYSTEM IS BAR GRATING W/ 1 1/4"x3/16" BEARING BARS @ 1 3/16" o.c. & CROSS BARS @ 4" o.c. SERIES GW AS MANUFACTURED BY MCNICHOLS OR APPROVED EQUAL. BAR GRATING SHALL BE ATTACHED TO THE STRUCTURE USING F-9 GRATING CLIPS SECURED WITH SELF TAPPING SS SCREWS. (PRE-DRILLING MAY BE REQUIRED) THERE SHALL BE A MINIMUM OF 2 CLIPS PER PANEL PER SUPPORT AND A MAXIMUM OF 4 CLIPS PER PANEL.
2. FLOOR HAS BEEN DESIGNED FOR A LIVE LOAD OF 100 PSF.

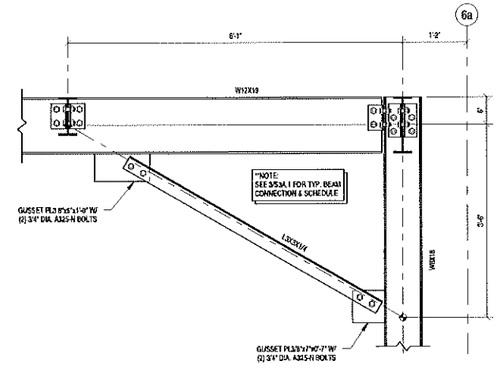

4 FRAMING SECTION
SCALE: 3/4" = 1'-0"

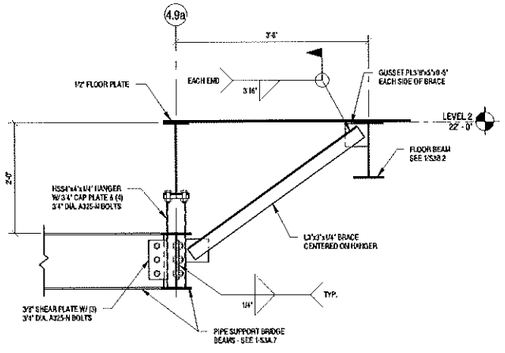

5 FRAMING SECTION
SCALE: 3/4" = 1'-0"

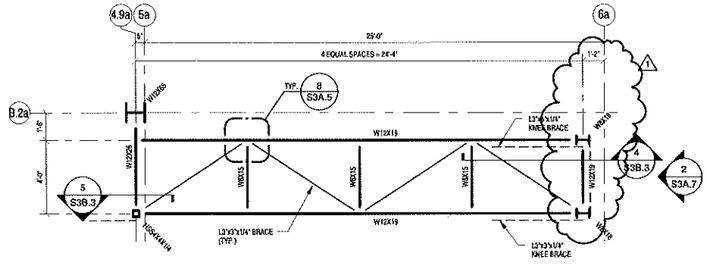

6 LINE 'B' PIPE SUPPORT BRIDGE (T.O. BEAM EL= +20'-0")
SCALE: 1/4" = 1'-0"

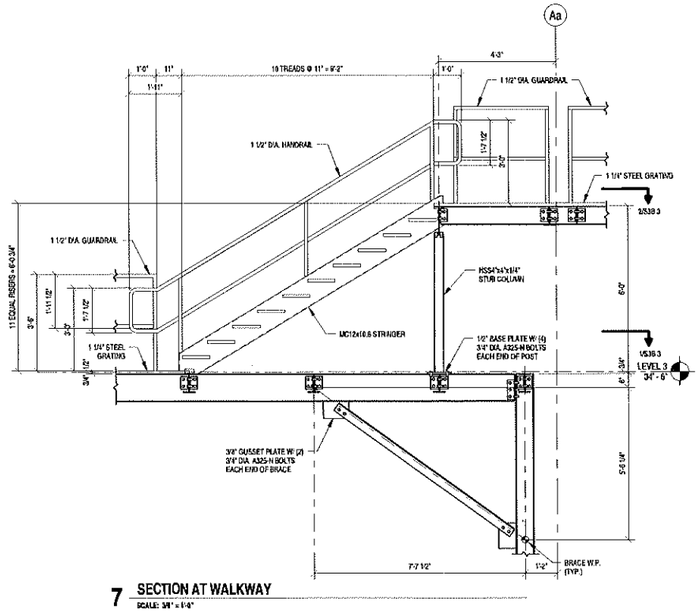

7 SECTION AT WALKWAY
SCALE: 3/8" = 1'-0"

JOHNSON & PACE INCORPORATED
ENGINEERING • ARCHITECTURE • SURVEYING
1201 NW LOOP 281, SUITE 100, LONGVIEW, TEXAS 75604
903/663-1000 FAX 903/663-1001
WEBSITE www.johnsonpace.com

This document is released for the purpose of interim review under the authority of Richard Lewis, P.E. of Johnson & Pace, Inc. It is not to be used for construction, or permit purposes.

SOUTHERN PRECISION SANDS
NEW COATING FACILITY
VOCA, TEXAS

REVISIONS

NO.	DESCRIPTION	BY	DATE
1	REVISED AS NOTED	SAW	2-2-11

LINE 'B' FRAMING PLANS

ISSUED FOR BID

JOB NO. 2009-10-005-02		DATE 01/26/2011	
DRAWN BY SAW	REVIEWED BY JD	APPROVED BY RL	SCALE As indicated
SHEET NO. S3B.3			REVISION NO. 1

Copyright © 2010, Johnson & Pace Incorporated

Filename: S:\Projects\Southern Precision\2569-10-006-02 STRUCT\Dwg_Jpro\Plum.dwg
Plotted: 3/23/2011 4:12:14 PM
Copyright ©2010, Johnson & Pace Incorporated
THIS DRAWING AND ASSOCIATED SPECIFICATIONS, REPORTS, ELECTRONIC FILES, DOCUMENTS, ELECTRONIC MEDIA, METHODS AND/OR FORMS HEREON OR OF THE ESTIMATED LOCATION IN THE FIELD IS TRUE, BY VIRTUE OF THEIR ISSUANCE, JOHNSON & PACE, INC. (JP) IS NOT RESPONSIBLE FOR THE ACCURACY OF ANY UNAUTHORIZED USE OF THESE DOCUMENTS, INCLUDING WITHOUT LIMITATION, REPRODUCTION OR ALTERATION, IS STRICTLY PROHIBITED AND SHALL LIMIT THE AVAILITY OF ANY EXPRESSED WARRANTIES AND ALSO STOP ANY UNRELATED WORK FROM BEING CONTINUED. USE OR REUSE OF SUCH UNAUTHORIZED USE OF CHANGES.

JOB NO:	2569-10-006-02	ISSUE DATE:
DRAWN BY: SAW	DESIGNED BY: JD	APPROVED BY: RL
SCALE: As Indicated		
SHEET NO.: S3B.4	REVISION NO: 1	

LINE 'B' TOWER ELEVATIONS

ISSUED FOR BID

NO	DATE	BY	DESCRIPTION
1	2-4-11	SAW	REVISED AS NOTED

REVISIONS

SOUTHERN PRECISION SANDS
NEW COATING FACILITY
VOCA, TEXAS

This document is released for the purpose of interim review under the authority of Richard Lewis, P.E. 77788 on 02-03-11. It is not to be used for construction, or permit purposes.

JOHNSON & PACE INCORPORATED
ENGINEERING • ARCHITECTURE • SURVEYING
1201 NW LOOP 281, SUITE 100,
LONGVIEW, TEXAS 75604
903-758-1881 FAX 903-758-1882
WEB SITE: www.johnsonpace.com

REVISIONS				
ZONE	REV.	DESCRIPTION	BY	DATE
	1	APPROVAL REVISIONS	DMK	12/1/10

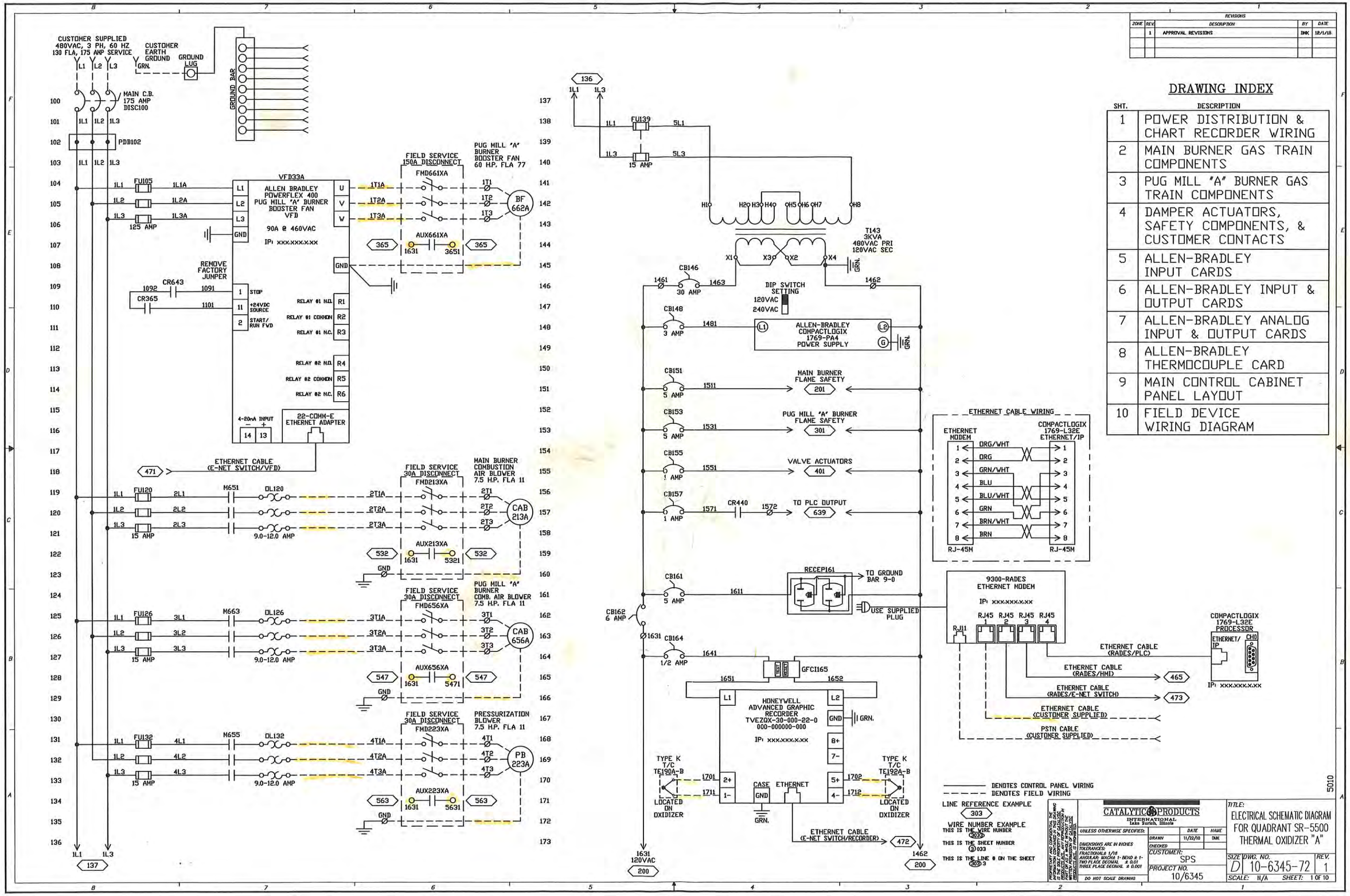

DRAWING INDEX

SHT.	DESCRIPTION
1	POWER DISTRIBUTION & CHART RECORDER WIRING
2	MAIN BURNER GAS TRAIN COMPONENTS
3	PUG MILL "A" BURNER GAS TRAIN COMPONENTS
4	DAMPER ACTUATORS, SAFETY COMPONENTS, & CUSTOMER CONTACTS
5	ALLEN-BRADLEY INPUT CARDS
6	ALLEN-BRADLEY INPUT & OUTPUT CARDS
7	ALLEN-BRADLEY ANALOG INPUT & OUTPUT CARDS
8	ALLEN-BRADLEY THERMOCOUPLE CARD
9	MAIN CONTROL CABINET PANEL LAYOUT
10	FIELD DEVICE WIRING DIAGRAM

REVISIONS				
ZONE	REV.	DESCRIPTION	BY	DATE
	1	APPROVAL REVISIONS	DMK	12/1/10

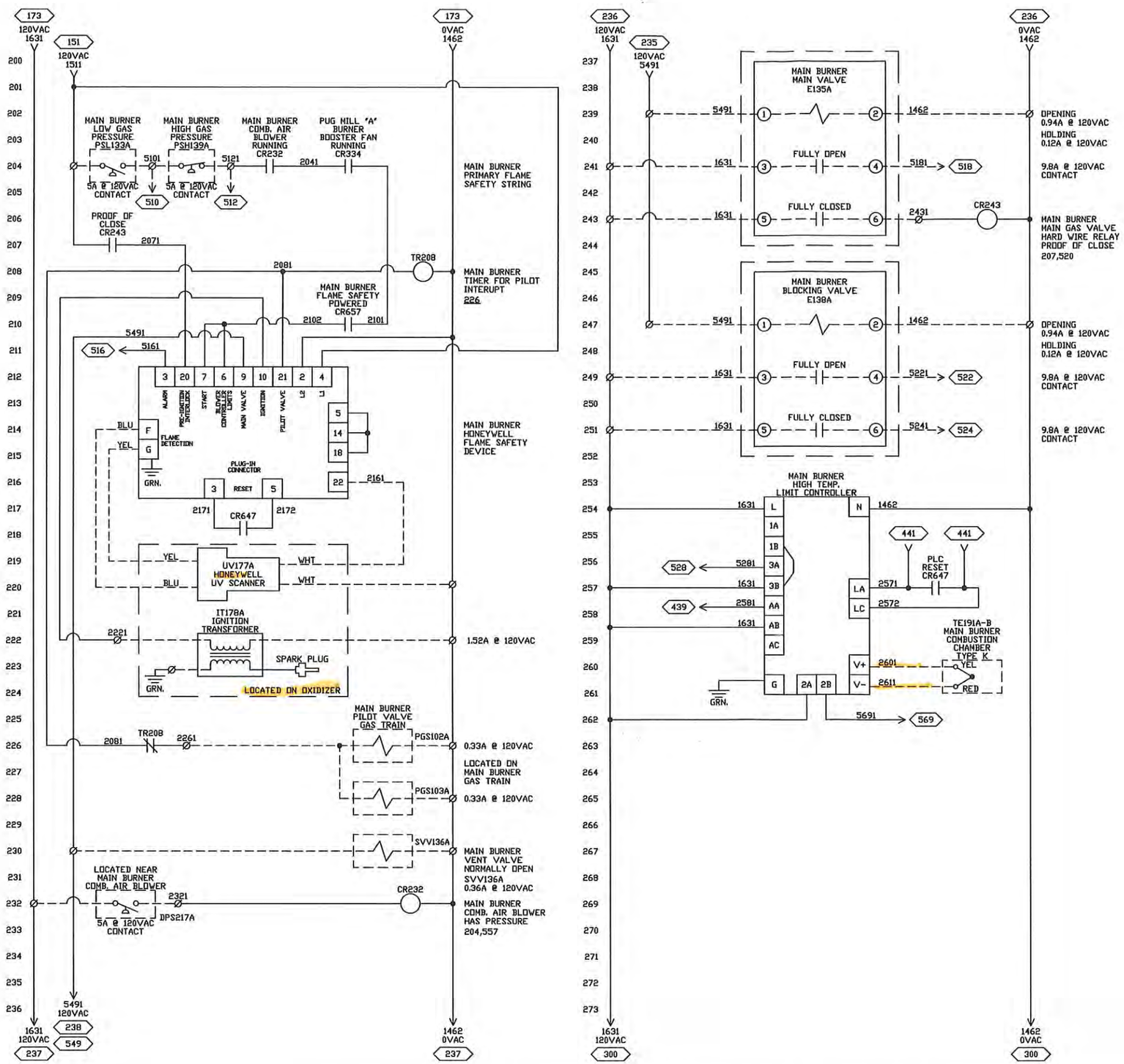

DENOTES CONTROL PANEL WIRING
DENOTES FIELD WIRING

LINE REFERENCE EXAMPLE
303

WIRE NUMBER EXAMPLE
THIS IS THE WIRE NUMBER 2033
THIS IS THE SHEET NUMBER 2 033
THIS IS THE LINE # ON THE SHEET 303 3

PROPRIETARY AND CONFIDENTIAL THE INFORMATION CONTAINED IN THIS DRAWING IS THE SOLE PROPERTY OF CATALYTIC PRODUCTS. ANY REPRODUCTION IN PART OR AS A WHOLE WITHOUT THE WRITTEN PERMISSION OF CATALYTIC PRODUCTS IS PROHIBITED.

CATALYTIC PRODUCTS INTERNATIONAL
Lake Zurich, Illinois

UNLESS OTHERWISE SPECIFIED:
DIMENSIONS ARE IN INCHES
TOLERANCES:
FRACTIONALS ± 1/16
ANGULAR: MACH± 1- BEND ± 1-
TWO PLACE DECIMAL ± 0.01
THREE PLACE DECIMAL ± 0.001
DO NOT SCALE DRAWING

	DATE	NAME
DRAWN	11/22/10	DMK
CHECKED		

CUSTOMER: SPS
PROJECT NO. 10/6345

TITLE: ELECTRICAL SCHEMATIC DIAGRAM FOR QUADRANT SR-5500 THERMAL OXIDIZER "A"

SIZE D DWG. NO. 10-6345-73 REV. 1
SCALE: N/A SHEET: 2 OF 10

5010

REVISIONS				
ZONE	REV	DESCRIPTION	BY	DATE
	1	APPROVAL REVISIONS	DMK	12/1/10

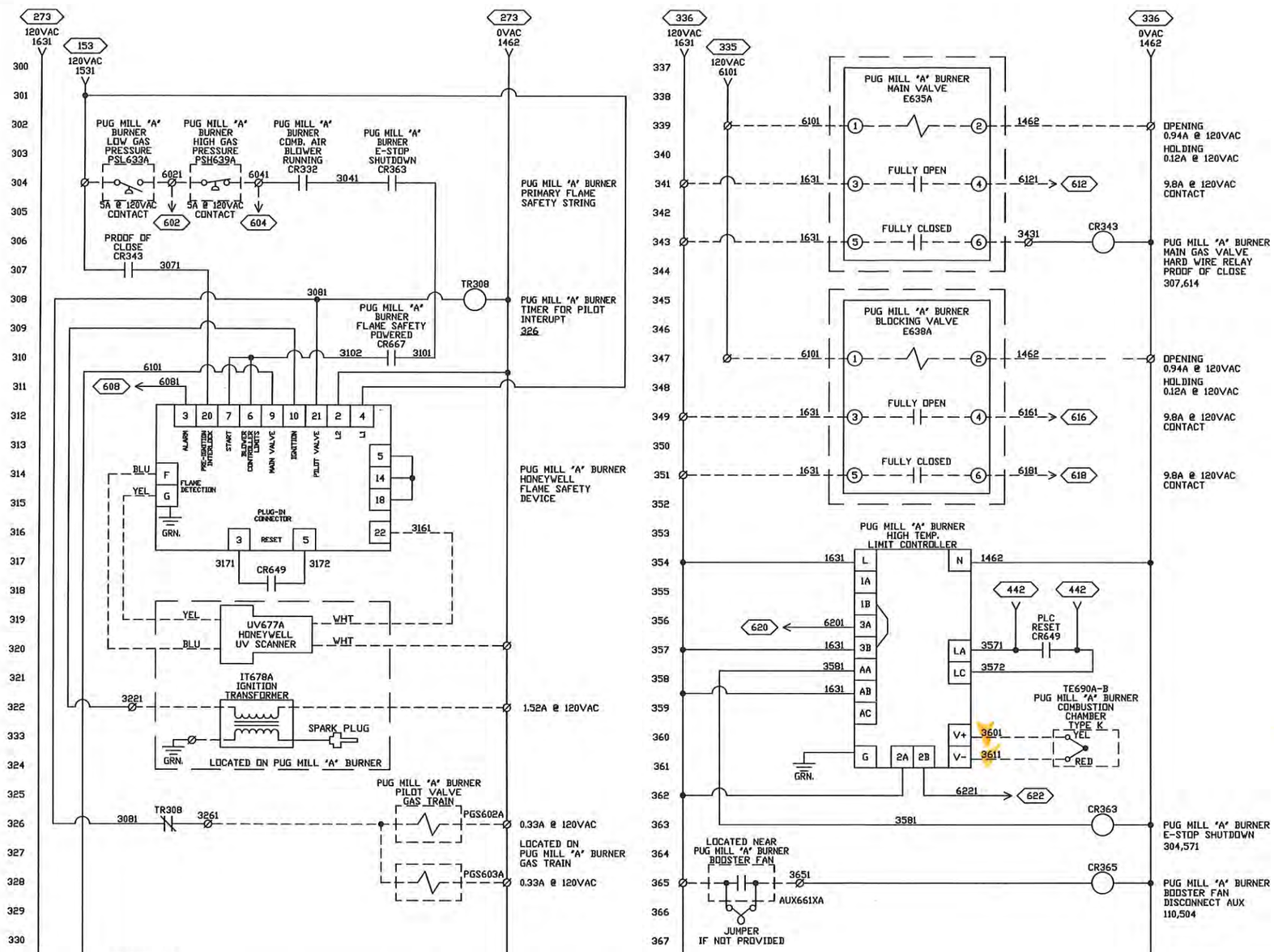

DENOTES CONTROL PANEL WIRING
DENOTES FIELD WIRING

LINE REFERENCE EXAMPLE
303

WIRE NUMBER EXAMPLE
THIS IS THE WIRE NUMBER
6039
THIS IS THE SHEET NUMBER
3 033
THIS IS THE LINE # ON THE SHEET
303 3

5010

PROPRIETARY INFORMATION: THE INFORMATION CONTAINED IN THIS DRAWING IS THE SOLE PROPERTY OF CATALYTIC PRODUCTS INTERNATIONAL. ANY REPRODUCTION IN PART OR AS A WHOLE WITHOUT THE WRITTEN PERMISSION OF CATALYTIC PRODUCTS INTERNATIONAL IS PROHIBITED.

CATALYTIC PRODUCTS INTERNATIONAL
Lake Zurich, Illinois

UNLESS OTHERWISE SPECIFIED:		DATE	NAME
DIMENSIONS ARE IN INCHES TOLERANCES: FRACTIONALS ± 1/16 ANGULAR: MACH ± 1 BEND ± 1° TWO PLACE DECIMAL ± 0.01 THREE PLACE DECIMAL ± 0.001	DRAWN	11/23/10	DMK
	CHECKED		
	CUSTOMER: SPS		
	PROJECT NO. 10/6345		

DO NOT SCALE DRAWING

TITLE:
ELECTRICAL SCHEMATIC DIAGRAM
FOR QUADRANT SR-5500
THERMAL OXIDIZER "A"

SIZE	DWG. NO.	REV.
D	10-6345-74	1

SCALE: N/A SHEET: 3 OF 10

MAIN CONTROL PANEL
PAINTED STEEL
NEMA 12 / TYPE 12

REVISIONS				
ZONE	REV.	DESCRIPTION	BY	DATE
	1	APPROVAL REVISIONS	DMK	12/1/10

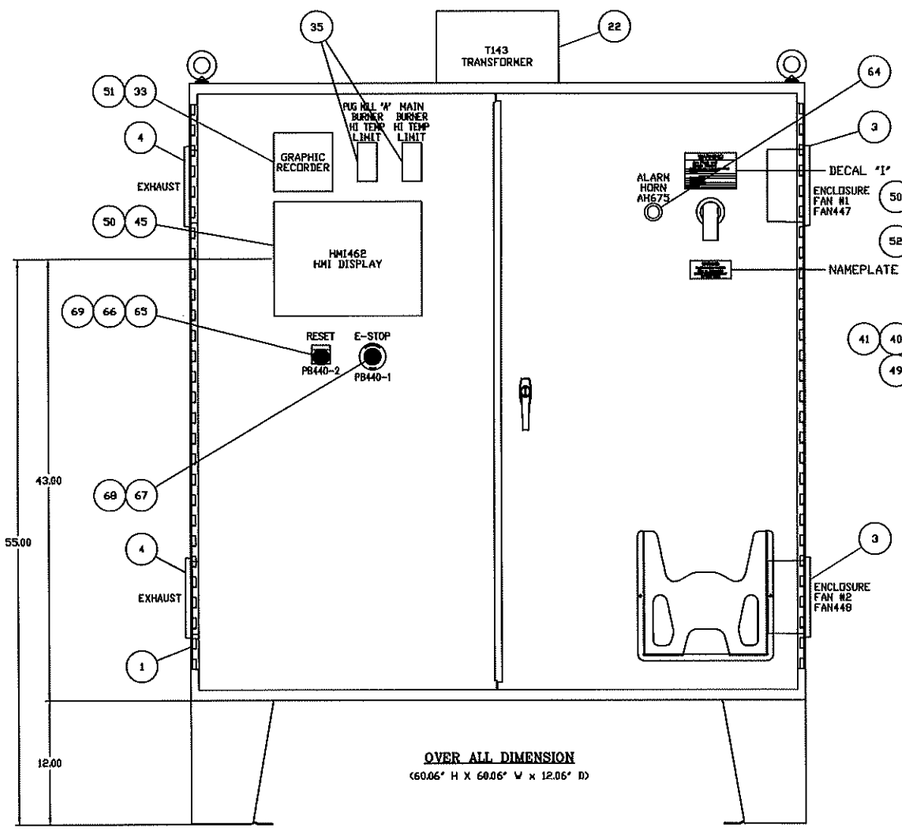

OVER ALL DIMENSION
(60.06" H X 60.06" W x 12.06" D)

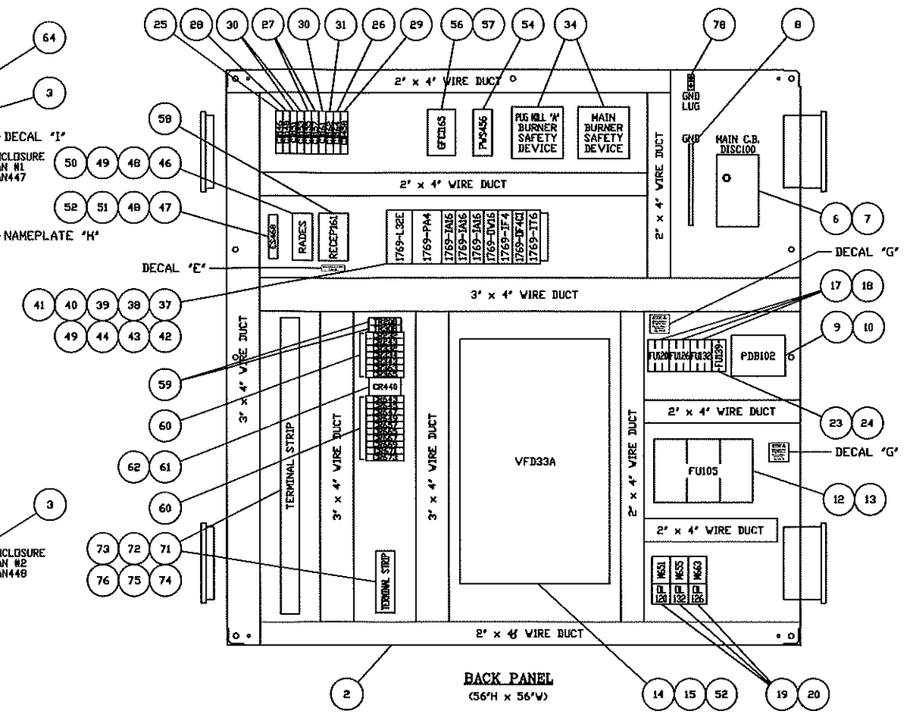

ITEM	QTY.	PART NO.	DESCRIPTION
1	1	A606012LP	HOFFMAN ENCLOSURE, NEMA 12, 12.06" D X 60.06" W X 60.06" H
			2 DOOR, 12" LEG KIT
2	1	A60P60	HOFFMAN SUBPANEL, 56" W X 56" H
3	2	TFP61	HOFFMAN COOLING FAN, 120VAC, 6", 140 CFM
4	2	TEP6	HOFFMAN EXHAUST FILTER, 6"
5			
6	1	JGE3175FAG	C.H. CIRCUIT BREAKER, 175 AMP, 3 POLE, 600 VOLT
7	1	FJHNVD1ER	C.H. DISCONNECT HANDLE, RED, 12" SHAFT, NEMA 4X
8	1	GBK13	C.H. GROUND BAR, (13) #1/0-#14 AWG
9	1	67453	SHAWMUT POWER DISTRIBUTION BLOCK, 3 POLE, 300 AMP, (1) 500-#4
			PRI, (1) 350-#6 & (3) #2-14 SEC
10	3	08570	SHAWMUT COVER, 1 POLE
11			
12	3	AJT125	SHAWMUT FUSE, 125 AMP, 600VAC, TIME DELAY, CLASS J
13	1	62003J	SHAWMUT FUSE BLOCK, 3 POLE, 101-200 AMP, 600 VOLT, CLASS J
14	1	22C-D08BA103	A.B. VFD, POWERFLEX 400 SERIES, 60 HP, 480VAC, IP 20
15	1	22-COMM-E	A.B. VFD ETHERNET COMMUNICATION ADAPTER
16			
17	9	ATQR15	SHAWMUT FUSE, 15 AMP, 600VAC, TIME DELAY, CLASS CC
18	3	USCC3	SHAWMUT FUSE HOLDER, 3 POLE, 600V, 0-30 AMP, CLASS CC
19	3	XTCE015B10A	C.H. CONTACTOR, 15.5 AMP, 120VAC COIL, 1 NO
20	3	XTDB012B2C1	C.H. OVERLOAD, 9.0-12.0 AMP, 1 NO, 1 NC
21			
22	1	HS5F3AS	HEVI-DUTY TRANSFORMER, 3KVA, 240/460VAC PRI, 120/240VAC SEC
23	2	ATQR15	SHAWMUT FUSE, 15 AMP, 600VAC, TIME DELAY, CLASS CC
24	1	USCC2	SHAWMUT FUSE HOLDER, 2 POLE, 600V, 0-30 AMP, CLASS CC
25	1	WKZS1C30	C.H. CIRCUIT BREAKER, 30 AMP, 1 POLE
26	1	WKZS1C00	C.H. CIRCUIT BREAKER, 1/2 AMP, 1 POLE
27	2	WKZS1C01	C.H. CIRCUIT BREAKER, 1 AMP, 1 POLE
28	1	WKZS1C03	C.H. CIRCUIT BREAKER, 3 AMP, 1 POLE
29	1	WKZS1C04	C.H. CIRCUIT BREAKER, 4 AMP, 1 POLE
30	3	WKZS1C05	C.H. CIRCUIT BREAKER, 5 AMP, 1 POLE
31	1	WKZS1C06	C.H. CIRCUIT BREAKER, 6 AMP, 1 POLE
32			
33	1	TVEZ0X-30-C00-E2-0-000-000000-000	HONEYWELL ADVANCED GRAPHIC RECORDER
34	2	RM7800M1011	HONEYWELL FLAME SAFETY DEVICE
35	2	2208/KS/VH/RL/RL/RE/RF/XX/XXX/NJ/N	EUROTHERM HIGH TEMP CONTROLLER
36			
37	1	1769-L32E	A.B. PLC PROCESSOR, COMPACTLOGIX, ETHERNET
38	1	1769-PA4	A.B. PLC POWER SUPPLY, 120VAC INPUT
39	3	1769-IA16	A.B. PLC DIGITAL INPUT MODULE, 16 POINT, 120VAC
40	1	1769-OW16	A.B. PLC RELAY OUTPUT MODULE, 16 POINT
41	1	1769-IF4	A.B. PLC ANALOG INPUT MODULE, 4 POINT
42	1	1769-OF4CI	A.B. PLC ANALOG OUTPUT MODULE, 4 POINT, ISLOATED
43	1	1769-IT6	A.B. PLC THERMOCOUPLE INPUT MODULE, 6 CHANNEL
44	1	1769-ECR	A.B. RIGHT END CAP
45	1	2711P-T12C4D7	A.B. HMI, PANELVIEW PLUS 1250, TOUCHSCREEN, 12.1", COLOR,
			ETHERNET, 24VDC, 256MB MEMORY
46	1	9300-RADES	A.B. ETHERNET DIAL-IN MODEM, 4 PORT RJ45, 1 PORT RJ11
47	1	8696940000	WEIDMULLER IE-SVS-VAVE ETHERNET SWITCH, 5 PORT, 24VDC
48	1	27130	CABLES TO GO ETHERNET CABLE, 1 FOOT, CAT-6, RJ-45 CONNECTOR
49	1	27131	CABLES TO GO ETHERNET CABLE, 3 FOOT, CAT-6, RJ-45 CONNECTOR
50	1	31340	CABLES TO GO ETHERNET CABLE, 5 FOOT, CAT-6, RJ-45 CONNECTOR
51	1	27132	CABLES TO GO ETHERNET CABLE, 7 FOOT, CAT-6, RJ-45 CONNECTOR
52	1	27133	CABLES TO GO ETHERNET CABLE, 10 FOOT, CAT-6, RJ-45 CONNECTOR
53			
54	1	PSSR-SE24	IDEC POWER SUPPLY, 24VDC, 3.75 AMP
55			
56	1	8590-I	LEVITON GFCI, 20 AMP, 125VAC, BLANK FACE
57	1	660	RACO HANDY BOX
58	1	67200054 21	WEIDMULLER DUPLEX RECEPTACLE, 120VAC, 15 AMP
59	2	700-FEA3TU23	A.B. TIMER, ON-DELAY, 120VAC
60	17	PFDAPE-2S-AC120	OMRON RELAY, DPDT, 120VAC, BASE
61	1	LY4-AC120	OMRON RELAY, 4PDT, 120VAC
62	1	PTF14A-E	OMRON RELAY BASE, 14 PIN
63			
64	1	SC110R	MALLORY ALARM HORN, 120VAC
65	1	10250T101-2	C.H. PUSHBUTTON, NON-ILLUM., BLACK, FLUSH, 2 NO
66	1	10250T53	C.H. CONTACT BLOCK, 1 NO
67	1	10250T363C47-1X	C.H. PUSHBUTTON, ILLUM, RED, MUSHROOM, PUSH-PULL, 1 NO, 1 NC, 120VAC
68	1	10250TRP79	C.H. E-STOP LEGEND RING YELLOW
69	1	10250TS36	C.H. LEGEND PLATES
70			
71	136	XBUT4	C.H. TERMINAL BLOCK, 30 AMP, 600 VOLT
72	9	XBUTPE	C.H. TERMINAL GROUND
73	6	XBAES35C	C.H. END ANCHORS
74	3	XBAF8S106	C.H. JUMPERS, 10 TERMINALS
75	2	XBMP2B6	C.H. BLANK MARKING CARD, (20 PER CARD)
76	3	PFP100N	OMRON DIN RAIL
77	A/R	CLT	PANDUIT WIRE DUCT, AS REQUIRED
78	1	LANA2/0-14-QY	PANDUIT GROUND LUG, #2/0-#14 AWG

ENGRAVED NAMEPLATES:
H - WARNING: MULTIPLE SUPPLY SOURCES...

DECALS: (MOUNTED ON INSIDE OF DOOR)
A - ELECTRICAL DATA
B - FUSE CHART
C - CONDUIT HUB RATINGS
D - FIELD CONNECTION DATA

DECALS: (MOUNTED ON OUTSIDE OF DOOR)
I - ARC FLASH AND SHOCK HAZARD...

DECALS: (LOCATED BY COMPONENT)
E - RECEPTACLE RATING
G - REPLACE WITH SAME FUSE TYPE/SIZE..

5010

PROPRIETARY AND CONFIDENTIAL THE INFORMATION CONTAINED IN THIS DRAWING IS THE SOLE PROPERTY OF CATALYTIC PRODUCTS INT'L. ANY REPRODUCTION IN PART OR AS A WHOLE WITHOUT THE WRITTEN PERMISSION OF CATALYTIC PRODUCTS INT'L IS PROHIBITED.

CATALYTIC PRODUCTS INTERNATIONAL
Lake Zurich, Illinois

UNLESS OTHERWISE SPECIFIED:		DATE	NAME
	DRAWN	11/22/10	DMK
DIMENSIONS ARE IN INCHES	CHECKED		
TOLERANCES:	CUSTOMER:	SPS	
FRACTIONALS 1/16			
ANGULAR: MACH ± 1° BEND ± 1°	PROJECT NO.	10/6345	
TWO PLACE DECIMAL ± 0.01			
THREE PLACE DECIMAL ± 0.001			
DO NOT SCALE DRAWING			

TITLE:
NEMA 12
ENCLOSURE W/
BACK PANEL

SIZE	DWG. NO.	REV.
D	10-6345-80	1

SCALE: N/A SHEET: 9 OF 10

REVISIONS				
ZONE	REV	DESCRIPTION	BY	DATE
	1	APPROVAL REVISIONS	DMK	12/1/10

480VAC, 3 PHASE, 60 HZ
130 FLA, 175 AMP SERVICE

MAIN CONTROL CABINET

PUG MILL "A" BOOSTER FAN DISC. SW FMD661XA AND DISC. SW. AUX661XA	CONDUIT #1 3 BLACK 1 GREEN 4 GA. THHN STRANDED 2 RED 14 GA. THHN STRANDED
PUG MILL "A" BOOSTER FAN MOTOR BF662A	CONDUIT #1A 3 BLACK 1 GREEN 4 GA. THHN STRANDED
MAIN BURNER COMB AIR BLOWER DISC. SW FMD213XA AND DISC. SW AUX213XA	CONDUIT #2 3 BLACK 1 GREEN 12 GA. THHN STRANDED 2 RED 14 GA. THHN STRANDED
MAIN BURNER COMBUSTION AIR BLOWER MOTOR CAB213A	CONDUIT #2A 3 BLACK 1 GREEN 12 GA. THHN STRANDED
PUG MILL "A" BURNER COMB. AIR BLOWER DISC. SW FMD656XA AND DISC. SW AUX656XA	CONDUIT #3 3 BLACK 1 GREEN 12 GA. THHN STRANDED 2 RED 14 GA. THHN STRANDED
PUG MILL "A" BURNER COMBUSTION AIR BLOWER MOTOR CAB656A	CONDUIT #3A 3 BLACK 1 GREEN 12 GA. THHN STRANDED
PRESSURIZATION BLOWER DISC. SW FMD223XA AND DISC. SW AUX223XA	CONDUIT #4 3 BLACK 1 GREEN 12 GA. THHN STRANDED 2 RED 14 GA. THHN STRANDED
PRESSURIZATION BLOWER MOTOR PB223A	CONDUIT #4A 3 BLACK 1 GREEN 12 GA. THHN STRANDED
MAIN BURNER GAS TRAIN J-BOX	CONDUIT #5 20 RED, 3 WHITE AND 3 GREEN 14 GA. THHN STRANDED 1 PAIR 2 CONDUCTOR SHIELDED 18 GA. THHN STRANDED
PUG MILL "A" BURNER GAS TRAIN J-BOX	CONDUIT #6 20 RED, 3 WHITE AND 3 GREEN 14 GA. THHN STRANDED 1 PAIR 2 CONDUCTOR SHIELDED 18 GA. THHN STRANDED
MAIN BURNER COMBUSTION AIR BLOWER PSW DPS217A	CONDUIT #7 2 RED, 1 WHITE AND 1 GREEN 14 GA. THHN STRANDED
PUG MILL "A" BURNER COMBUSTION AIR BLOWER PSW DPS651A	CONDUIT #8 2 RED, 1 WHITE AND 1 GREEN 14 GA. THHN STRANDED
PUG MILL "A" BURNER BOOSTER FAN PSW DPS665A	CONDUIT #9 2 RED, 1 WHITE AND 1 GREEN 14 GA. THHN STRANDED
MAIN BURNER COMBUSTION AIR BLOWER AIR CONTROL E219A	CONDUIT #10 1 RED, 1 WHITE AND 1 GREEN 14 GA. THHN STRANDED 1 PAIR 2 CONDUCTOR SHIELDED 18 GA. THHN STRANDED
PUG MILL "A" BURNER COMBUSTION AIR BLOWER AIR CONTROL E680A	CONDUIT #11 1 RED, 1 WHITE AND 1 GREEN 14 GA. THHN STRANDED 1 PAIR 2 CONDUCTOR SHIELDED 18 GA. THHN STRANDED
PUG MILL "A" BURNER HIGH DUCT PSW PSH666A	CONDUIT #12 2 RED, 1 WHITE AND 1 GREEN 14 GA. THHN STRANDED
PRESSURIZATION BLOWER PSW DPS226A	CONDUIT #13 2 RED, 1 WHITE AND 1 GREEN 14 GA. THHN STRANDED
COMPRESSED AIR SOLENOID SV118A	CONDUIT #14 1 RED, 1 WHITE AND 1 GREEN 14 GA. THHN STRANDED
PUG MILL "A" BURNER PRESSURE X-MTR PT660A	CONDUIT #15 1 PAIR 2 CONDUCTOR SHIELDED 18 GA. THHN STRANDED
THERMOCOUPLES	CONDUIT #16 2 TYPE K T/C WIRES 20 GA. TO EACH T/C WELL (TYPICAL TO EACH T/C) (MUST BE KEPT IN SEPARATE CONDUIT)
UV SCANNERS	CONDUIT #17 2 PAIR 4 CONDUCTOR SHIELDED 12 GA. THHN STRANDED (MUST BE KEPT IN SEPARATE CONDUIT)
INTERLOCKS TO/FROM MAIN BURNER	CONDUIT #18 6 YELLOW 14 GA. THHN STRANDED
INTERLOCKS TO/FROM PUG MILL "A" BURNER	CONDUIT #19 10 YELLOW 14 GA. THHN STRANDED

ETHERNET CABLE (CUSTOMER SUPPLIED) — CUSTOMER ETHETNET

P.S.T.N. ANALOG PHONE LINE (CUSTOMER SUPPLIED) — CUSTOMER MODEM

CONDUIT #1

FMD661XA DISC. SVITCH		DISC. SVITCH AUX661XA	
3 BLK, 1 GRN 4 GA.		2 RED 14 GA.	
WIRE NUMBER	WIRE NUMBER	WIRE NUMBER	WIRE NUMBER
1T1A	1T3A	1631	
1T2A	GND	3631	

CONDUIT #1A

BF662A PUG MILL "A" BOOSTER FAN MOTOR			
3 BLK, 1 GRN 4 GA.			
WIRE NUMBER	WIRE NUMBER	WIRE NUMBER	WIRE NUMBER
1T1	1T3		
1T2	GND		

CONDUIT #2

FMD213XA DISC. SVITCH		DISC. SVITCH AUX213XA	
3 BLK, 1 GRN 12 GA.		2 RED 14 GA.	
WIRE NUMBER	WIRE NUMBER	WIRE NUMBER	WIRE NUMBER
2T1A	2T3A	1631	
2T2A	GND	3631	

CONDUIT #2A

CAB213A MAIN BURNER COMBUSTION AIR BLOWER MOTOR			
3 BLK, 1 GRN 12 GA.			
WIRE NUMBER	WIRE NUMBER	WIRE NUMBER	WIRE NUMBER
2T1	2T3		
2T2	GND		

CONDUIT #3

FMD656XA DISC. SVITCH		DISC. SVITCH AUX656XA	
3 BLK, 1 GRN 12 GA.		2 RED 14 GA.	
WIRE NUMBER	WIRE NUMBER	WIRE NUMBER	WIRE NUMBER
3T1A	3T3A	1631	
3T2A	GND	5471	

CONDUIT #3A

CAB656A PUG MILL "A" BURNER COMBUSTION AIR BLOWER MOTOR			
3 BLK, 1 GRN 12 GA.			
WIRE NUMBER	WIRE NUMBER	WIRE NUMBER	WIRE NUMBER
3T1	3T3		
3T2	GND		

CONDUIT #4

FMD223XA DISC. SVITCH		DISC. SVITCH AUX223XA	
3 BLK, 1 GRN 12 GA.		2 RED 14 GA.	
WIRE NUMBER	WIRE NUMBER	WIRE NUMBER	WIRE NUMBER
4T1A	4T3A	1631	
4T2A	GND	5631	

CONDUIT #4A

PB223A PRESSURIZATION BLOWER MOTOR			
3 BLK, 1 GRN 12 GA.			
WIRE NUMBER	WIRE NUMBER	WIRE NUMBER	WIRE NUMBER
4T1	4T3		
4T2	GND		

CONDUIT #5

MAIN BURNER GAS TRAIN J-BOX			
20 RED 14 GA.			
WIRE NUMBER	WIRE NUMBER	WIRE NUMBER	WIRE NUMBER
1511	5431	5241	SPARE 3
1521	5161	5431	SPARE 4
1531	5121	5491	SPARE 5
2221	5181	SPARE 1	SPARE 6
2261	5221	SPARE 2	SPARE 7
3 WHITE 14 GA.		3 GREEN 14 GA.	
WIRE NUMBER	WIRE NUMBER	WIRE NUMBER	WIRE NUMBER
1462	1462	GND	GND
1462		GND	
1 PAIR 2 COND. SHLD 18 GA.			
WIRE NUMBER	WIRE NUMBER	WIRE NUMBER	WIRE NUMBER
7431+	7431-		

CONDUIT #5A

CAB213A MAIN BURNER COMBUSTION AIR BLOWER MOTOR			
3 RED 12 GA.			
WIRE NUMBER	WIRE NUMBER	WIRE NUMBER	WIRE NUMBER
2T1	2T3		
2T2	GND		

CONDUIT #6

PUG MILL "A" BURNER GAS TRAIN J-BOX			
20 RED 14 GA.			
WIRE NUMBER	WIRE NUMBER	WIRE NUMBER	WIRE NUMBER
1531	3431	6161	SPARE 3
1551	6081	6181	SPARE 4
1631	6041	6241	SPARE 5
2221	6101	SPARE 1	SPARE 6
2261	6121	SPARE 2	SPARE 7
3 WHITE 14 GA.		3 GREEN 14 GA.	
WIRE NUMBER	WIRE NUMBER	WIRE NUMBER	WIRE NUMBER
1462	1462	GND	GND
1462		GND	
1 PAIR 2 COND. SHLD 18 GA.			
WIRE NUMBER	WIRE NUMBER	WIRE NUMBER	WIRE NUMBER
7461+	7461-		

CONDUIT #7

MAIN BURNER COMBUSTION AIR BLOWER PSW DPS217A			
2 RED 14 GA.		1 WHITE & 1 GREEN 14 GA.	
WIRE NUMBER	WIRE NUMBER	WIRE NUMBER	WIRE NUMBER
1631	6321	1462	GND

CONDUIT #8

PUG MILL "A" BURNER COMBUSTION AIR BLOWER PSW DPS651A			
2 RED 14 GA.		1 WHITE & 1 GREEN 14 GA.	
WIRE NUMBER	WIRE NUMBER	WIRE NUMBER	WIRE NUMBER
1631	3321	1462	GND

CONDUIT #9

PUG MILL "A" BURNER BOOSTER FAN PSW DPS665A			
2 RED 14 GA.		1 WHITE & 1 GREEN 14 GA.	
WIRE NUMBER	WIRE NUMBER	WIRE NUMBER	WIRE NUMBER
1631	3341	1462	GND

CONDUIT #10

MAIN BURNER COMB. AIR BLOWER AIR CONTROL E219A			
1 RED 14 GA.		1 WHITE & 1 GREEN 14 GA.	
WIRE NUMBER	WIRE NUMBER	WIRE NUMBER	WIRE NUMBER
1551		1462	GND
1 PAIR 2 COND. SHLD 18 GA.			
WIRE NUMBER	WIRE NUMBER	WIRE NUMBER	WIRE NUMBER
7481+	7481-		

CONDUIT #11

PUG MILL "A" BURNER COMB. AIR BLOWER AIR CONTROL E680A			
1 RED 14 GA.		1 WHITE & 1 GREEN 14 GA.	
WIRE NUMBER	WIRE NUMBER	WIRE NUMBER	WIRE NUMBER
1551		1462	GND
1 PAIR 2 COND. SHLD 18 GA.			
WIRE NUMBER	WIRE NUMBER	WIRE NUMBER	WIRE NUMBER
7491+	7491-		

CONDUIT #12

PUG MILL "A" BURNER HIGH DUCT PSV PSH666A			
2 RED 14 GA.		1 WHITE & 1 GREEN 14 GA.	
WIRE NUMBER	WIRE NUMBER	WIRE NUMBER	WIRE NUMBER
1631	5511	1462	GND

CONDUIT #13

PRESSURIZATION BLOWER PSV DPS226A			
2 RED 14 GA.		1 WHITE & 1 GREEN 14 GA.	
WIRE NUMBER	WIRE NUMBER	WIRE NUMBER	WIRE NUMBER
1631	5651	1462	GND

CONDUIT #14

COMPRESSED AIR SOLENOID SV118A			
2 RED 14 GA.		1 WHITE & 1 GREEN 14 GA.	
WIRE NUMBER	WIRE NUMBER	WIRE NUMBER	WIRE NUMBER
6411		1462	GND

CONDUIT #15

PUG MILL "A" BURNER PRESSURE X-MTR PT660A			
1 PAIR 2 COND. SHLD 18 GA.			
WIRE NUMBER	WIRE NUMBER	WIRE NUMBER	WIRE NUMBER
4591	7921+		

CONDUIT #16

TE190A		TE195A	
2 TYPE K T/C 20 GA.		2 TYPE K T/C 20 GA.	
WIRE NUMBER	WIRE NUMBER	WIRE NUMBER	WIRE NUMBER
1T01	8061+	8601	8101+
1T11	8061-	8611	8101-
TE196A		TE696A	
2 TYPE K T/C 20 GA.		2 TYPE K T/C 20 GA.	
WIRE NUMBER	WIRE NUMBER	WIRE NUMBER	WIRE NUMBER
1T02	8141+	3601	8181+
1T12	8141-	3611	8181-
TE691A			
2 TYPE K T/C 20 GA.			
WIRE NUMBER	WIRE NUMBER	WIRE NUMBER	WIRE NUMBER
8221+	8221-		

CONDUIT #17

UV SCANNER UV177A			
2 PAIR 4 COND. SHLD 12 GA.			
WIRE NUMBER	WIRE NUMBER	WIRE NUMBER	WIRE NUMBER
F	G	1462	2161
UV SCANNER UV677A			
2 PAIR 4 COND. SHLD 12 GA.			
WIRE NUMBER	WIRE NUMBER	WIRE NUMBER	WIRE NUMBER
F	G	1462	3161

CONDUIT #18

INTERLOCKS TO/FROM MAIN BURNER			
6 YELLOW 14 GA.			
TEMPERATURE READY		FAULT SIGNAL	
WIRE NUMBER	WIRE NUMBER	WIRE NUMBER	WIRE NUMBER
4781	4782	4801	4802
REQUEST TO START T.O.			
WIRE NUMBER	WIRE NUMBER	WIRE NUMBER	WIRE NUMBER
1631	5531		

CONDUIT #19

INTERLOCKS TO/FROM PUG MILL "A" BURNER			
10 YELLOW 14 GA.			
TEMPERATURE READY		RUN PERMISSIVE	
WIRE NUMBER	WIRE NUMBER	WIRE NUMBER	WIRE NUMBER
4821	4822	4841	4842
FAULT SIGNAL		REQUEST TO RUN	
WIRE NUMBER	WIRE NUMBER	WIRE NUMBER	WIRE NUMBER
4861	4862	1631	5551
WATER BEING ADDED TO PUG MILL "A"			
WIRE NUMBER	WIRE NUMBER	WIRE NUMBER	WIRE NUMBER
1631	5591		

* NOTE: THIS IS A SUGGESTED WIRE PULL DRAWING INTENDED AS REFERENCE MATERIAL DURING INSTALLATION. THE ELECTRICAL CONTRACTOR IS RESPONSIBLE FOR DETERMINING WIRE AND CONDUIT SIZES AS PER LOCAL CODES. WIRES LABELED AS (MUST BE KEPT SEPARATE) MUST BE RUN IN ITS OWN CONDUIT.

5010

PROPRIETARY INFORMATION: THE INFORMATION CONTAINED IN THIS DRAWING IS THE SOLE PROPERTY OF CATALYTIC PRODUCTS INTERNATIONAL. ANY REPRODUCTION IN PART OR AS A WHOLE WITHOUT THE WRITTEN PERMISSION OF CATALYTIC PRODUCTS INTERNATIONAL IS PROHIBITED.

CATALYTIC PRODUCTS INTERNATIONAL
Lake Zurich, Illinois

UNLESS OTHERWISE SPECIFIED:
DIMENSIONS ARE IN INCHES
TOLERANCES:
FRACTIONALS ± 1/16
ANGULAR: MACH ± 1- BEND ± 1-
TWO PLACE DECIMAL ± 0.01
THREE PLACE DECIMAL ± 0.001

DO NOT SCALE DRAWING

	DATE	NAME
DRAWN	11/22/10	DMK
CHECKED		

CUSTOMER: SPS
PROJECT NO. 10/6345

TITLE: WIRE PULL DIAGRAM FOR QUADRANT SR-5500 THERMAL OXIDIZER "A"

SIZE D | DWG. NO. 10-6345-81 | REV. 1
SCALE: N/A SHEET: 10 OF 10